Attachment F

Westech Engineering Inc.
Triple Rotoscreen / Conveyor / SWP Control Panel
Dos Rios WRC, San Antonio, TX

Item No	Component	Description	Manufacturer Part Number	QTY	Device
Triple Rotoscreen / Conveyor / SWP Control Panel (Quantity: 2)					
1	00-000-000	Wire, Hardware, Wire labels, etc.	EleMech: Miscellaneous	6	
2	10-069-000	Wireway Duct Cover, 1.5"W, 6 Ft. Section, w/Panduit F Series	Panduit: C1.5WH6	6	
3	10-069-002	Wireway Duct Cover, 2"W, 6 Ft. Section, w/Panduit F Series	Panduit: C2WH6	6	
4	10-069-005	Wireway Duct, 1.5"Wx3"H, 6 Foot Section	Panduit: F1.5X3WH6	6	
5	10-069-008	Wireway Duct, 2"Wx3"H, 6 Foot Section	Panduit: F2X3WH6	6	
6	25-000-A001	Legendplate Assembly, Yellow E-Stop, Standard Encl.	EleMech: 25-000-A001 Assembly	1	
7	25-000-A002	Legendplate Assembly, White, Black Text, Standard Encl.	EleMech: 25-000-A002 Assembly	15	
8	25-000-A019	Nameplate Assembly, White: Power Supply - 3/60/480VAC	EleMech: 25-000-A019 Assembly	1	
9	25-050-001	Nameplate/Legendplate, Custom Engraving	PJD: CUSTOM	10	
10	42-063-007	Terminal Block, Din Rail, 35MM Wide, 15 High, 2 Meters Long	Wieland: 98.370.1000	2	
11	52-069-002	Heat Shrink tube, 4' strip, (64 labels) Clear	Panduit: HSTT19-48-QC(clear)	15	
12	68-035-007	Air Cond, NEMA 4X, 2000 BTU, 115VAC, 7 Amps, w/500W Heater	Hoffman: T200216G157	1	AC1
13	01-005-005	Alarm Horn, Panel Mount, 120VAC, 45mm front, 22.5mm, NEMA 4X	Allen Bradley: 855P-B10ME22	1	AH1
14	53-017-000	Conduit, Hub, 3/4", Zinc, NEMA 4X, Std.	Appleton: HUB-75D	1	AL1
15	56-021-013	Beacon, Strobe, Halogen, NEMA 4X, 0.25A@120VAC, Red	Edwards: 125HALFR120A	1	AL1
16	18-000-002	Steel Barrier, 14 Ga., White Finish, 0.5"Wx10.0"x6.0"D	EleMech: 18-000-002	1	BAR1
17	03-018-083	Circuit Breaker, 3 Pole, 480VAC, 50A, 65K AIC, E125	Cutler-Hammer: EGH3050FFG	1	CB1
18	03-018-108	Circuit Breaker Aux. Contact, E125-Frame, 1NO/NC, 6A	Cutler-Hammer: AUX1A1BPK	1	CB1
19	03-018-A004	Circuit Breaker Disconnect Kit, NEMA 4X, E-Frame, 12" Shaft	Cutler-Hammer: EGHMVD12RX Assem	1	CB1
20	03-056-024	Circuit Breaker, 1 Pole, 240VAC, 2A, 14kA, UL489, Type C	Siemens: 5SJ4102-7HG40	2	CB12,13
21	03-056-054	Circuit Breaker, 2 Pole, 480VAC, 16A, 10kA, UL489, Type D	Siemens: 5SJ4216-8HG42	1	CB2
22	03-056-038	Circuit Breaker, 1 Pole, 240VAC, 13A, 14kA, UL489, Type C	Siemens: 5SJ4113-7HG40	2	CB3,7
23	03-056-032	Circuit Breaker, 1 Pole, 240VAC, 20A, 14kA, UL489, Type C	Siemens: 5SJ4120-7HG40	1	CB4
24	03-056-031	Circuit Breaker, 1 Pole, 240VAC, 15A, 14kA, UL489, Type C	Siemens: 5SJ4118-7HG40	1	CB5
25	03-056-026	Circuit Breaker, 1 Pole, 240VAC, 4A, 14kA, UL489, Type C	Siemens: 5SJ4104-7HG40	1	CB6
26	03-056-025	Circuit Breaker, 1 Pole, 240VAC, 3A, 14kA, UL489, Type C	Siemens: 5SJ4103-7HG40	1	CB8
27	03-056-022	Circuit Breaker, 1 Pole, 240VAC, 1A, 14kA, UL489, Type C	Siemens: 5SJ4101-7HG40	3	CB9-11
28	57-279-003	Cable, Comm., Fiber Optic, LC to SC, Duplex Patch, 3 M	Black Box: EFN110-003M-SCLC	1	CBL11
29	57-009-006	Cable, Signal, Shielded, 2 Conductor, 18AWG, Per Foot	Belden: 8760	20	CBL1-5
30	57-000-002	Cable, Comm., Ethernet, Standard, RJ45M - RJ45M, Blue, 7'	Deep Surplus: CB242-7BL	5	CBL6-10
31	06-058-011	Control Relay, 3PDT,120VAC, 11Pin Spade, Indicator, Operator	Square D: RXM3AB2F7	12	CR1-12
32	06-058-012	Control Relay, Bus Jumper, 2-Pole, w/Telemec. RXM Relay	Square D: RXZ S2	11	CR1-12

Item No	Component	Description	Manufacturer Part Number	QTY	Device
33	38-058-003	Socket, 11 Pin Spade, Din, Screw Term., 3Tier, 250V w/3-Pole	Square D: RXZE2S111M	12	CR1-12
34	34-024-000	PM, Current Xfmr, 1PH, 0.4-10A, Din Rail, CTM10, w/EL-FI	Emotron: 01-2471-10	3	CT1-3
35	07-063-000	Distribution Block, End Cover, 4 Pole, 300V,10A, w/WK4E\V\VB	Wieland: 07.311.4053.1	2	DB1
36	07-063-001	Distribution Block, Jumper, 4 Pole, 300V,10A, w/WK4E\V\VB	Wieland: Z7.210.3427	5	DB1
37	07-063-002	Distribution Block, Single Pole, 10A, 300V, WK4E\V\VB	Wieland: 57.404.6955.1	24	DB1
38	42-063-004	Terminal Block, Ground, 30A, 600V, 6MM Wide, w/WK4/U	Wieland: 57.504.9053.0	8	DB1,TB1
39	07-030-009	Distribution Block, Cover,Single Pole, 175-460A,Poly/Medium	Ferraz-Shawmut: 08570	3	DB2
40	07-030-012	Distribution Block, Adder Pole, 175A, 2-14AWG, 1 In, 8 Out	Ferraz-Shawmut: 67580	2	DB2
41	07-030-013	Distribution Block, Single Pole, 175A, 2-14AWG, 1 In, 8 Out	Ferraz-Shawmut: 67581	1	DB2
42	11-035-243	Sub-Panel, Painted Steel, w/60"Hx60"W 2-Door Enc.	Hoffman: A-60P60	1	EN1
43	11-035-588	Enclosure, Nema 4X, 316SS, 62"Hx60"Wx12"D, 3PT, Free Standin	Hoffman: A-62H6012SS6LP3PT	1	EN1
44	11-035-666	Enclosure Shelf, Folding, Stainless, 12"x12"	Hoffman: ACSHELF1212SS	1	EN1
45	33-279-003	Fiber Patch Box, Locking, up to 4 Adapter Panels,Surface Mnt	Black Box: JPM402A-R2	1	FPP1
46	33-279-004	Fiber Patch Box Adapter Panels, 3 Duplex SC Pairs	Black Box: JPM405A-R2	2	FPP1
47	13-030-081	Fuse, Glass, Fast Acting, 250VAC, 3 Amp	Ferraz-Shawmut: GGC-3	2	FU1,2
48	42-063-026	Terminal Block, Fused, Single Pole, 15A, 600V, 10MM, WK	Wieland: 57.904.6355.0	7	FU1-7
49	13-030-147	Fuse, Glass, Fast Acting, 250VAC, 1/2 Amp	Ferraz-Shawmut: GGC-1/2	3	FU3-5
50	13-030-088	Fuse, Glass, Time Delay, 250VAC, 2 Amp	Ferraz-Shawmut: GGA-2	2	FU6,7
51	15-011-000	Ground Lug	Blackburn: L70	3	GND
52	15-058-001	Ground Bar, 9 Gage, 18-8AWG	Square D: PK9GTA	2	GND
53	06-058-024	Control Relay, SPDT,120VAC, 5Pin Spade, Operator, 15A	Square D: RPM12F7	38	IR1-38
54	38-058-009	Socket, 5 Pin Spade, Din Mount, Screw Term., w/ RPM 1-Pole	Square D: RPZF1	38	IR1-38
55	52-137-002	Label, Multiple Supply Sources, Warning, 2.5"Wx1.5"H, Yellow	Nameplate Tech: 52-137-002	1	LBL1
56	52-137-000	Label, High Voltage, Danger, 2.25"Wx4.0"H, White/Black/Red	Nameplate Tech: 52-137-000	1	LBL2
57	34-001-002	PM, 1/3PH, 110-500VAC, 0.5-5A, 2)SPDT, 120VAC	ABB: 1SVR 450 330 R0000	2	LM1,2
58	32-005-038	Pilot light, PTT, NEMA 4X, 120VAC/DC, LED, Amber	Allen-Bradley: 800H-QRTH10A	1	LT1
59	32-005-126	Pilot light, PTT, Nema 4X, 120VAC/DC, LED, Blue	Allen-Bradley: 800H-QRTH10B	5	LT-B
60	32-005-040	Pilot Light, PTT, NEMA 4X, 120VAC/DC, LED, Red	Allen-Bradley: 800H-QRTH10R	5	LT-R
61	22-018-000	Motor Starter, Non-Rev., NEMA 0, 1 NO Aux, 120VAC Coil, w/OL	Cutler-Hammer: AN16BNOAC	3	M1-3
62	22-018-007	Aux. Contact, Top mounted, 3NO/1NC, w/C-H Freedom	Cutler-Hammer: C320KGT14	7	M1-5
63	22-018-002	Motor Starter, Reversing, NEMA 0, 120VAC Coil, w/OL	Cutler-Hammer: AN56BNOAC	2	M4,5-F/R
64	21-018-009	Motor Circuit Prot, 3 Pole, 480VAC, 15A, 5.7-12.6 FLA, GMCP	Cutler-Hammer: GMCP015E0C	5	MCP1-5
65	21-018-014	Motor Circuit Prot, Close Coupled Handle Mech. Lockout/GMCP	Cutler-Hammer: HRGMC10	5	MCP1-5

Item No	Component	Description	Manufacturer Part Number	QTY	Device
66	25-000-A010	Nameplate Assembly, White, Black Text, 1"Hx3"W	EleMech: 25-000-A010 Assembly	4	NP1,2,4,5
67	25-000-A013	Nameplate Assembly, Yellow: Intrinsically Safe Circuits P&F	EleMech: 25-000-A013 Assembly	1	NP3
68	26-044-008	OIU, Magelis, 12", NEMA 4X Indoor, 24VDC, Touch, Ethernet	Modicon: XBTGT6330	1	OIU1
69	WES-246-P004	Program, OIU, Magelis XBT GT, Standard	EleMech: WES-246-P004	1	OIU1
70	28-018-008	Overload Relay Heater Pack, 3PH, 4.55-7.40A, w/Freedom, C20	Cutler-Hammer: H2009B-3	5	OL1-5
71	29-005-010	Pushbutton E-Stop, NEMA 4X, Oper+1NCLB, Twist Rel. Red Head	Allen-Bradley: 800H-FRXT6D4	1	PB1
72	02-005-000	Contact Block, 1NO/1NC, w/A-B 800 Series	Allen-Bradley: 800T-XA	1	PB3
73	29-005-047	Pushbutton, Nema 4X, 1NO+1NC, Extended Head, Black	Allen-Bradley: 800H-BR2A	2	PB3,4
74	54-035-000	Panel Light, Flourescant, 0.35A, 115VAC, Off-On Swi, Recep.	Hoffman: ALF16M12R	2	PL1,2
75	33-044-127	M340, Discrete Input Module, 16 In, 120VAC	Modicon: BMXDAI1604	3	PLC1
76	33-044-129	M340, Analog Input Module, 4 Channel	Modicon: BMXAMI0410	1	PLC1
77	33-044-133	M340, Power Supply Module 115/240VAC, 36W	Modicon: BMXCPS3500	1	PLC1
78	33-044-136	M340, Rack, 8 Slot	Modicon: BMXXBP0800	1	PLC1
79	33-044-138	M340, Processor, BMX, (1) Serial, (1) USB, (1) Ethernet, 4MB	Modicon: BMXP342020	1	PLC1
80	33-044-140	M340, Electrostatic Shield Kit, 8-Slot, w/XBP0800	Modicon: BMXXSP0800	1	PLC1
81	33-044-141	M340, Screw Terminal Block, 20 Point	Modicon: BMXFTB2000	6	PLC1
82	33-044-146	M340, Protective Cover, Empty Slot, 5 Covers per Kit	Modicon: BMXXEM010	1	PLC1
83	33-044-147	M340, Discrete Output Module, 16 Out, 100/240VAC - Relay	Modicon: BMXDRA1605	1	PLC1
84	33-044-163	M340, Electrostatic Shield Terminal, Set of 10	Modicon: STBXSP3010	1	PLC1
85	WES-246-P005	Program, PLC, Modicon M340, Standard	EleMech: WES-246-P005	1	PLC1
86	34-024-009	PM, EL-FI M20 3PH, 380-500VAC, 2)SPST Out, 4/20mA Out	Emotron: 01-2520-40	3	PM1-3
87	37-202-002	Power Supply, 120W, 85-264VAC 2.2 Input, 24VDC 5A Out	Sola/Hevi-Duty: SDN 5-24-100P	1	PS1
88	37-159-000	Power Supply, 30W, 100-240VAC 0.35A Input, 24VDC 1.3A Out	Hirschmann: RPS30	2	PS2,3
89	14-071-A000	Receptacle Assembly, 6mA GFCI Trip, 15 Amps, 125VAC	Leviton: 6599-I Assembly	1	RECP1
90	14-037-A000	Receptacle Assembly, Single, 15 Amps, 125VAC	Hubbell: 5261-I Assembly	1	RECP2
91	13-000-A000	Spare Parts Box Assembly, Din Rail Mount	EleMech: 13-000-A000 Assembly	1	SP1
92	40-058-A000	Surge Suppressor Assembly, 650VAC Max., 3 Phase, w/Ground	Square D: SDSA3650 Assembly	1	SUR1
93	40-098-009	Surge Suppressor, 120VAC, 20A, 10kA, w/Filter, Din Mtd.	Phoenix: 28 56 70 2	1	SUR2
94	40-098-015	Surge Suppressor, (1)4-20mA, PlugTrab 1X2-24DC-ST, w/o Base	Phoenix: 28 56 03 2	2	SUR3,4
95	40-098-016	Surge Suppressor, Socket, PlugTrab 1X2-BE, Use w/1X2-24DC-ST	Phoenix: 28 56 03 2	2	SUR3,4
96	40-098-014	Surge Suppressor, RJ45 Female In-Out, DATATRAB, Rail Kit	Phoenix: 28 59 08 4	3	SUR5-7
97	33-159-009	Media Module, MICE switches, 10/100 Base	Hirschmann: MM2-4TX1(943-722-101	1	SW1
98	33-159-010	PLC 8 Port Managed Fast Ethernet Modular Switch, DIN, 24VDC	Hirschmann: MS30-1602SAAEHH04.0	1	SW1

Item No	Component	Description	Manufacturer Part Number	QTY	Device
99	33-159-012	Media Module, MICE switches, 4-Gigabit Ports	Hirschmann: MM4-2TX-SFP	1	SW1
100	33-159-013	Media Transceiver, MICE switches, LC Fiber Connector, w/SFP	Hirschmann: M-SFP-SX/LC	1	SW1
101	41-194-A003	Transformer Assembly, 480/240-120VAC, 3 KVA, Nema 4XSS	Rex: SC3LKEP4X Assembly	1	T1
102	42-063-000	Terminal Block, Labels, Custom Printed, w/WK4/U	Wieland: 04.242.6353-CUSTOM	260	TB,DB
103	42-063-009	Terminal Block, End Clamp, w/WKN10/U	Wieland: Z5.522.8553	11	TB,DB
104	42-063-008	Terminal Block, Labels, Blank, w/WK4/U	Wieland: Z4.242.6353	22	TB1
105	42-063-015	Terminal Block, Jumper, w/WK4/U, 02 pole, Insulated	Wieland: Z7.281.1227	4	TB1
106	42-063-001	Terminal Block, End Plate, Beige, w/WK4/U	Wieland: 07.311.0555.0	4	TB1-3,DB3
107	42-063-003	Terminal Block, Single Pole, 30A, 600V, 6MM Wide, WK4/U	Wieland: 57.504.0055.0	115	TB1-3,DB3
108	44-189-000	Thermocouple, Type J, 304 Stainless, 2-Wire	Grainger: 5ZY15	1	TC1
109	18-049-000	Transformer Isolated Barrier, Single Channel, 120VAC	P&F: KFA5-SR2/EX1.W	4	TIB1-4
110	52-000-003	Label, Underwriters Laboratories 698A, w/Decal Set	EleMech: 698A	1	UL
111	48-105-016	UPS, Powerware 9130 Series, 120VAC, 1500VA, 1350 Watts	Powerware: PW9130L-1500T-XL	1	UPS1
112	51-000-040	Cord, Extension, 9'-10", 15A, 14 Ga., 3 Wire, Male Plug Only	McMaster-Carr: 70355K84	1	UPS1
113	08-247-A001	Universal Transmitter, 2.3k VAC isolation, 2 Relays, Display	PR Electronics: 4116 Assembly	1	UT1
LCS, 10 Hole, Nema 4X, E-Stop, 7) H-O-R, 2) F-O-R, C1-D2 (Quantity: 2)					
114	25-000-A001	Legendplate Assembly, Yellow E-Stop, Standard Encl.	EleMech: 25-000-A001 Assembly	1	
115	25-000-A002	Legendplate Assembly, White, Black Text, Standard Encl.	EleMech: 25-000-A002 Assembly	9	
116	11-035-280	Enclosure, Nema 4X, 316SS, 14"Hx12"Wx6"D, Junction Box	Hoffman: A-1412CHNFSS6	1	LCS1,2
117	02-005-009	Contact Block Sealed, Stackable, 1NC, w/A-B 800 Series	Allen-Bradley: 800T-XD2Y	1	PB2
118	29-005-043	Pushbutton E-Stop, Nema 4X, No Contacts, Twist Rel. Red Head	Allen-Bradley: 800H-FRXT6	1	PB2
119	02-005-008	Contact Block Sealed, Stackable, 1NC - 1NO, w/A-B 800 Series	Allen-Bradley: 800T-XAY	9	SS
120	39-005-018	Selector Switch, Nema 4X, 3 Pos. Maintained, No Contacts	Allen-Bradley: 800H-JR2	7	SS-M
121	39-005-047	Selector Switch, Nema 4X, 3 Pos. Spring Fr. Rt., No Contact	Allen-Bradley: 800H-JR5	2	SS-SF
ULC, Hydroranger200, NEMA 4X FRP, Enclosure w/Win, Non-Haz (Quantity: 2)					
122	11-035-126	Sub-Panel, Painted Steel, w/12"Hx10"W Junction Box	Hoffman: A-12P10	1	EN
123	11-035-176	Enclosure Mounting Feet, Fiberglass, J box	Hoffman: A-50MFKR	1	EN
124	11-035-273	Enclosure, Nema 4X, Fiberglass, 13.53"Hx10"Wx7"D, w/Window	Hoffman: A-14107JFGQRPWR	1	EN
125	25-000-A023	Nameplate Assembly, White: Ultrasonic Level Controller	EleMech: 25-000-A023 Assembly	1	NPL
126	49-043-024	ULC, Hydro 200, 120VAC, 4-SPST, 2-SPDT, 4-20mA, Non-Haz	Milltronics: 7ML50341AA01	1	ULC
Zero Motion Assembly, Milltronics MFA-4P, Nema 4X FRP (Quantity: 2)					
127	11-035-126	Sub-Panel, Painted Steel, w/12"Hx10"W Junction Box	Hoffman: A-12P10	1	EN
128	11-035-176	Enclosure Mounting Feet, Fiberglass, J box	Hoffman: A-50MFKR	1	EN

Item No	Component	Description	Manufacturer Part Number	QTY	Device
129	11-035-273	Enclosure, Nema 4X, Fiberglass, 13.53"Hx10"Wx7"D, w/Window	Hoffman: A-14107JFGQRPWR	1	EN
130	25-000-A010	Nameplate Assembly, White, Black Text, 1"Hx3"W	EleMech: 25-000-A010 Assembly	1	NP
131	65-043-001	Zero Motion Sensor, 120VAC, 2-SPDT Relays, 4X, Probe Req'd	Milltronics: MFA-4P	1	ZSC
Spare Parts (Quantity: 1)					
132	06-058-011	Control Relay, 3PDT,120VAC, 11Pin Spade, Indicator, Operator	Square D: RXM3AB2F7	10	CR
133	06-058-012	Control Relay, Bus Jumper, 2-Pole, w/Telemec. RXM Relay	Square D: RXZ S2	10	CR
134	13-030-081	Fuse, Glass, Fast Acting, 250VAC, 3 Amp	Ferraz-Shawmut: GGC-3	50	FU
135	13-030-088	Fuse, Glass, Time Delay, 250VAC, 2 Amp	Ferraz-Shawmut: GGA-2	50	FU
136	13-030-147	Fuse, Glass, Fast Acting, 250VAC, 1/2 Amp	Ferraz-Shawmut: GGC-1/2	50	FU
137	06-058-024	Control Relay, SPDT,120VAC, 5Pin Spade, Operator, 15A	Square D: RPM12F7	10	IR
138	32-005-038	Pilot light, PTT, NEMA 4X, 120VAC/DC, LED, Amber	Allen-Bradley: 800H-QRTH10A	10	LT-A
139	32-005-126	Pilot light, PTT, Nema 4X, 120VAC/DC, LED, Blue	Allen-Bradley: 800H-QRTH10B	10	LT-B
140	32-005-040	Pilot Light, PTT, NEMA 4X, 120VAC/DC, LED, Red	Allen-Bradley: 800H-QRTH10R	10	LT-R
141	33-044-127	M340, Discrete Input Module, 16 In, 120VAC	Modicon: BMXDAI1604	2	PLC1
142	33-044-129	M340, Analog Input Module, 4 Channel	Modicon: BMXAMI0410	2	PLC1
143	33-044-133	M340, Power Supply Module 115/240VAC, 36W	Modicon: BMXCPS3500	2	PLC1
144	33-044-138	M340, Processor, BMX, (1) Serial, (1) USB, (1) Ethernet, 4MB	Modicon: BMXP342020	2	PLC1
145	33-044-147	M340, Discrete Output Module, 16 Out, 100/240VAC - Relay	Modicon: BMXDRA1605	2	PLC1
146	37-159-000	Power Supply, 30W, 100-240VAC 0.35A Input, 24VDC 1.3A Out	Hirschmann: RPS30	2	PS
147	37-202-002	Power Supply, 120W, 85-264VAC 2.2 Input, 24VDC 5A Out	Sola/Hevi-Duty: SDN 5-24-100P	2	PS
148	40-058-000	Surge Suppressor, 650VAC Max., 3 Phase, w/Ground (Non-Std)	Square D: SDSA3650	10	SUR
149	40-098-015	Surge Suppressor, (1)4-20mA, PlugTrab 1X2-24DC-ST, w/o Base	Phoenix: 28 56 03 2	10	SUR
150	42-063-003	Terminal Block, Single Pole, 30A, 600V, 6MM Wide, WK4/U	Wieland: 57.504.0055.0	10	TB
151	42-063-004	Terminal Block, Ground, 30A, 600V, 6MM Wide, w/WK4/U	Wieland: 57.504.9053.0	10	TB
152	48-105-016	UPS, Powerware 9130 Series, 120VAC, 1500VA, 1350 Watts	Powerware: PW9130L-1500T-XL	2	UPS
153	65-043-001	Zero Motion Sensor, 120VAC, 2-SPDT Relays, 4X, Probe Req'd	Milltronics: MFA-4P	1	ZSC
154	65-043-002	Zero Motion Sensor, Probe, Class 1, Div 1, 10M CBL w/ MFA-4P	Milltronics: XPP-5	1	ZSC
Spare Parts / Ship Loose (Total Quantity Provided)					
155	49-043-027	ULC, Hydroranger 200 Hand Held Programmer	Milltronics: 7ML1830-2AM	2	ULC
156	49-043-008	ULS, STH, 2"NPT, 10M Cable, FM Class 1 Div. 1	Milltronics: 7ML1100-0BA20	4	ULC
157	12-356-003	Float Switch, Mech., Mercury-Free, N.O., 20' Cable,w/ TIB	APG: FT-300A	2	FLS
158	11-035-345	Corrosion Inhibitor, Foam Type, Protects 10 Cubic Feet	Hoffman: A-HCI10E	4	EN
159	65-043-002	Zero Motion Sensor, Probe, Class 1, Div 1, 10M CBL w/ MFA-4P	Milltronics: XPP-5	2	ZSC

Note: No page 6

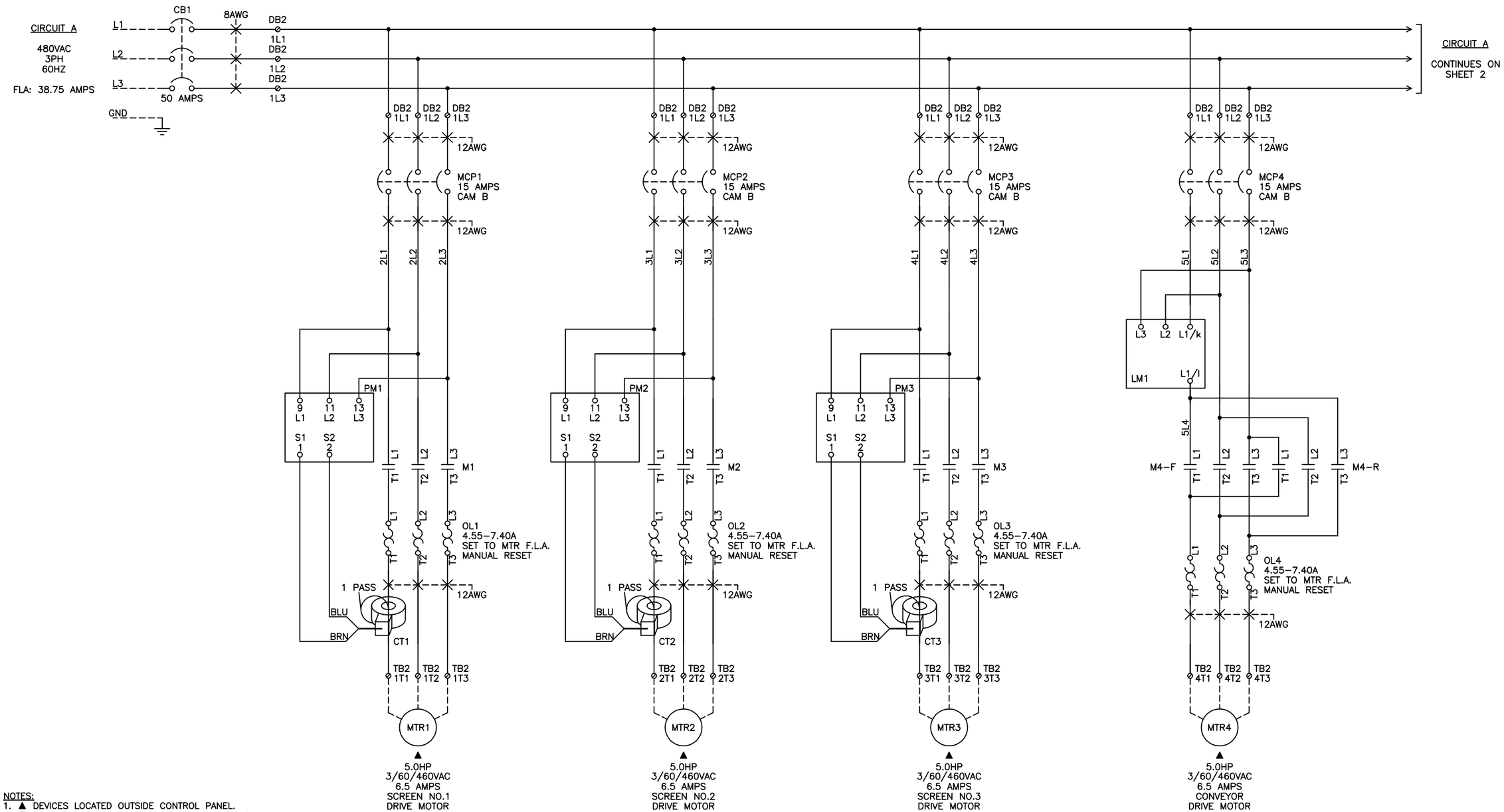

NOTES:
1. ▲ DEVICES LOCATED OUTSIDE CONTROL PANEL.
2. ▼ DEVICES LOCATED IN LOCAL CONTROL STATIONS.
3. ⊘ TERMINAL BLOCK (TB) OR DISTRIBUTION BLOCK (DB) LOCATED IN CONTROL PANEL.
4. – – FIELD WIRING.
5. NAMEPLATES SHALL BE WHITE WITH BLACK LETTERS.
6. NAMEPLATES SHALL BE ENGRAVED.
7. ELEMECH RESERVES THE RIGHT TO CHANGE, AS NECESSARY, THE SPACING, ORIENTATION, AND PHYSICAL LOCATION OF DEVICES IN ORDER TO OPTIMIZE THE DESIGN.
8. LOCAL MOTOR DISCONNECT SWITCHES SHALL BE PROVIDED BY OTHERS IF REQUIRED BY LOCAL REGULATIONS.
9. JUNCTION BOXES ARE NOT SHOWN AND SHALL BE PROVIDED BY OTHERS AS NECESSARY.
10. WIRE MARKERS SHALL BE HEAT SHRINK TYPE.
11. DRAWINGS TYPICAL FOR (2) CONTROL PANELS.

WIRE COLORS:
BLK – POWER
BLK – 120VAC HOT
WHT – 120VAC NEUTRAL
RED – 120VAC CONTROL
YEL – REMOTE
GRN – GROUND
BLU – DC POSITIVE/CONTROL
GRY – DC NEUTRAL

REVISION	BY	CHKD	DATE	LTR
				4
				3
				2
				1

TRIPLE ROTOSCREEN / CONVEYOR / SWP CONTROL PANEL
DESCRIPTION
5HP, 5HP, 5HP, 5HP, 5HP, 480VAC
TYPE | SIZE

DATE	STD. BY	STD.CHKD.	STD.APPVD	SCALE	DATE	PROJ. BY	PROJ.CHKD.	PROJ.APPVD
				NONE	04/11	BMG	RTH	RTH

ALL COMPONENTS MUST BE FABRICATED AND MACHINED ACCORDING TO WESTECH STANDARD SPECIFICATION (DRAWING P24Z-024A), UNLESS SPECIFICALLY NOTED ON THIS DRAWING.

This drawing is property of WESTECH ENGINEERING, INC. and is transmitted in confidence. Neither receipt nor possession confers or transfers any rights to reproduce, use, or disclose, in whole or in part, data contained herein for any purpose, without the written permission of WESTECH ENGINEERING, INC., Salt Lake City, Utah

WESTECH

DRAWING NUMBER	PROJECT NUMBER	REV.
E10D	21258ABC	0

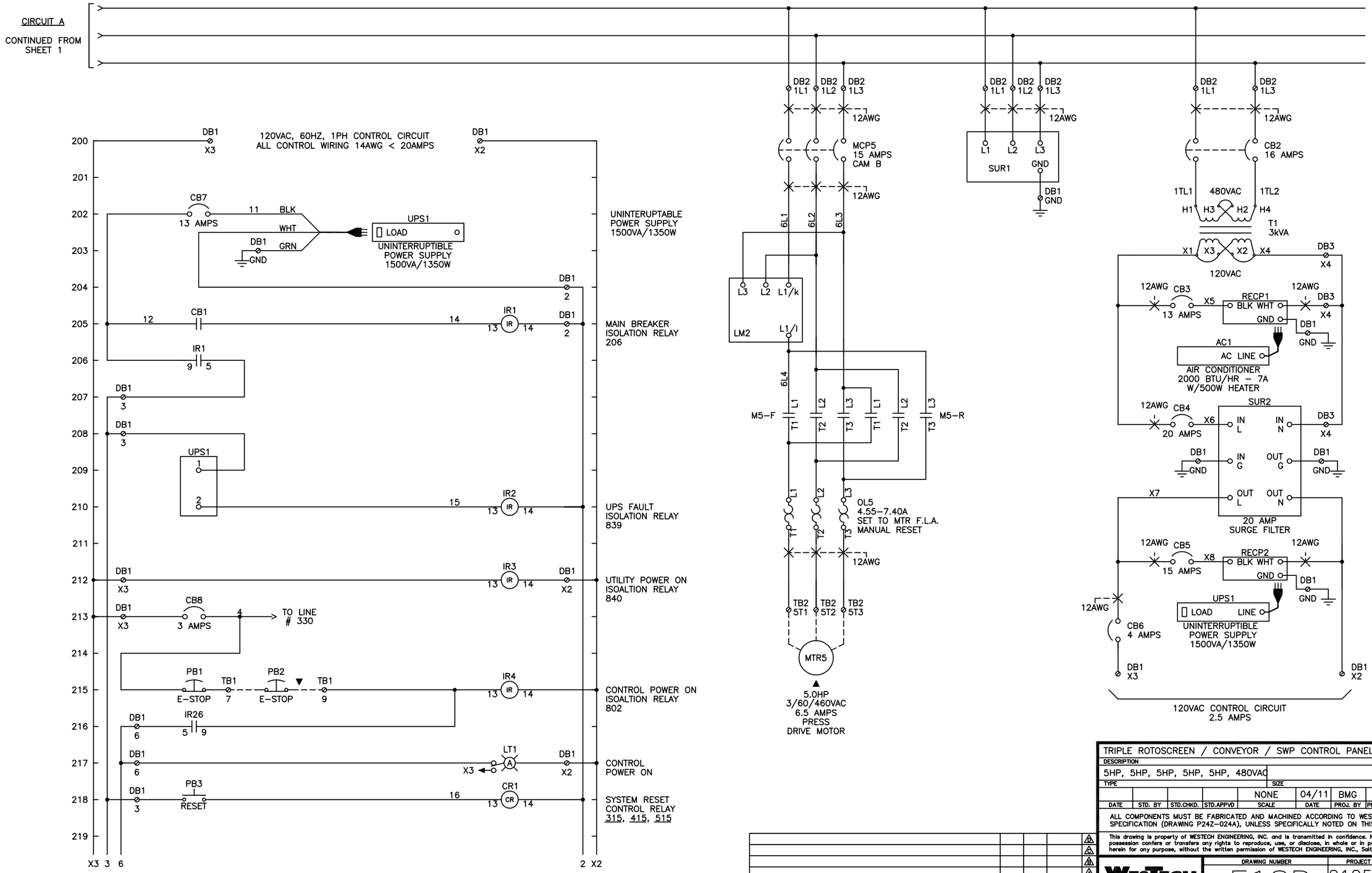

				4
				5
				6
				3
REVISION	BY	CHKD	DATE	LTR

TRIPLE ROTOSCREEN / CONVEYOR / SWP CONTROL PANEL

DESCRIPTION: 5HP, 5HP, 5HP, 5HP, 5HP, 480VAC

TYPE				SIZE				
				NONE	04/11	BMG	RTH	RTH
DATE	STD. BY	STD.CHKD.	STD.APPVD	SCALE	DATE	PROJ. BY	PROJ.CHKD.	PROJ.APPVD

ALL COMPONENTS MUST BE FABRICATED AND MACHINED ACCORDING TO WESTECH STANDARD SPECIFICATION (DRAWING P24Z–024A), UNLESS SPECIFICALLY NOTED ON THIS DRAWING.

This drawing is property of WESTECH ENGINEERING, INC. and is transmitted in confidence. Neither receipt nor possession confers or transfers any rights to reproduce, use, or disclose, in whole or in part, data contained herein for any purpose, without the written permission of WESTECH ENGINEERING, INC., Salt Lake City, Utah

WESTECH

DRAWING NUMBER	PROJECT NUMBER	REV.
E10D	21258ABC	0

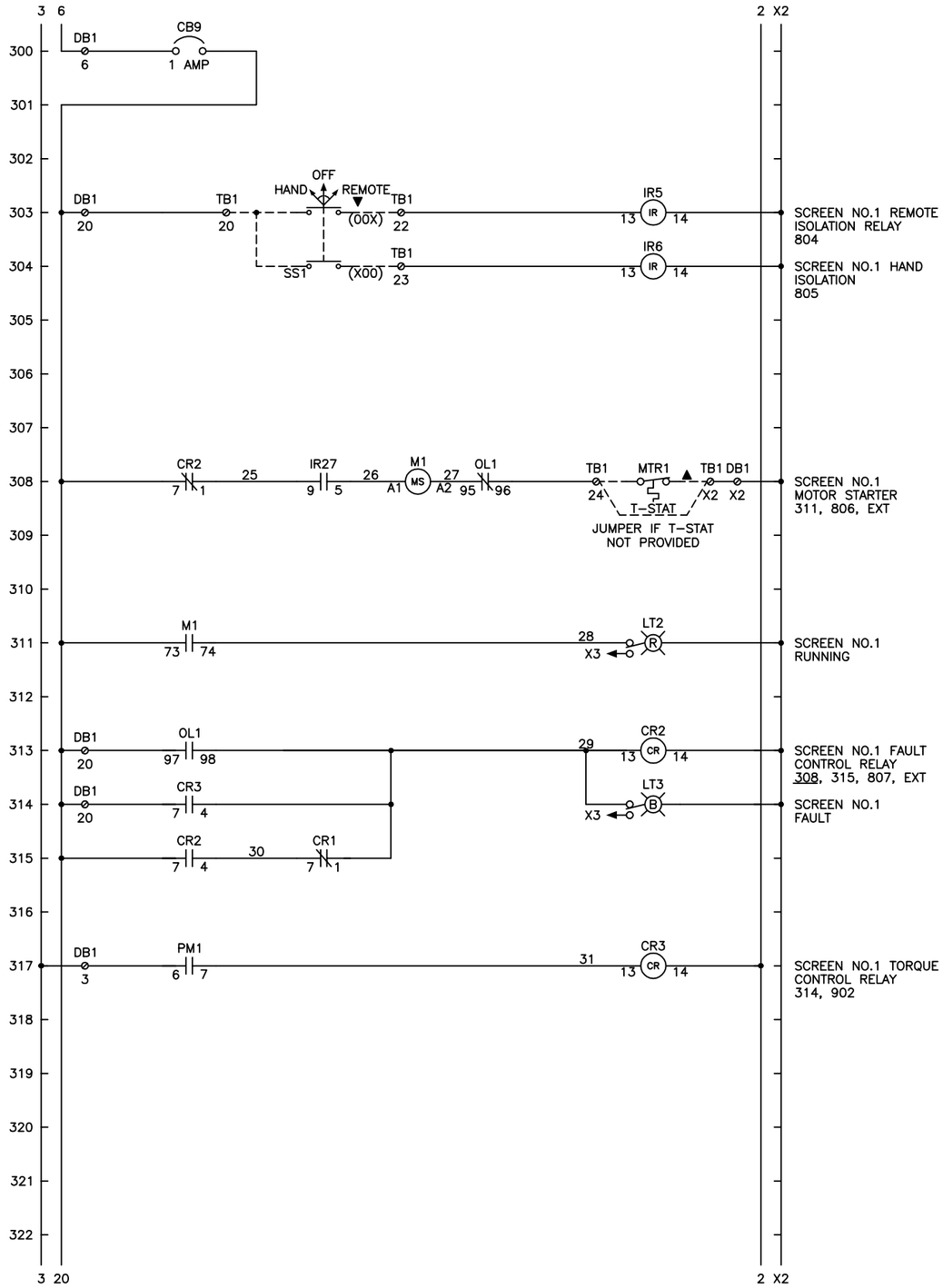

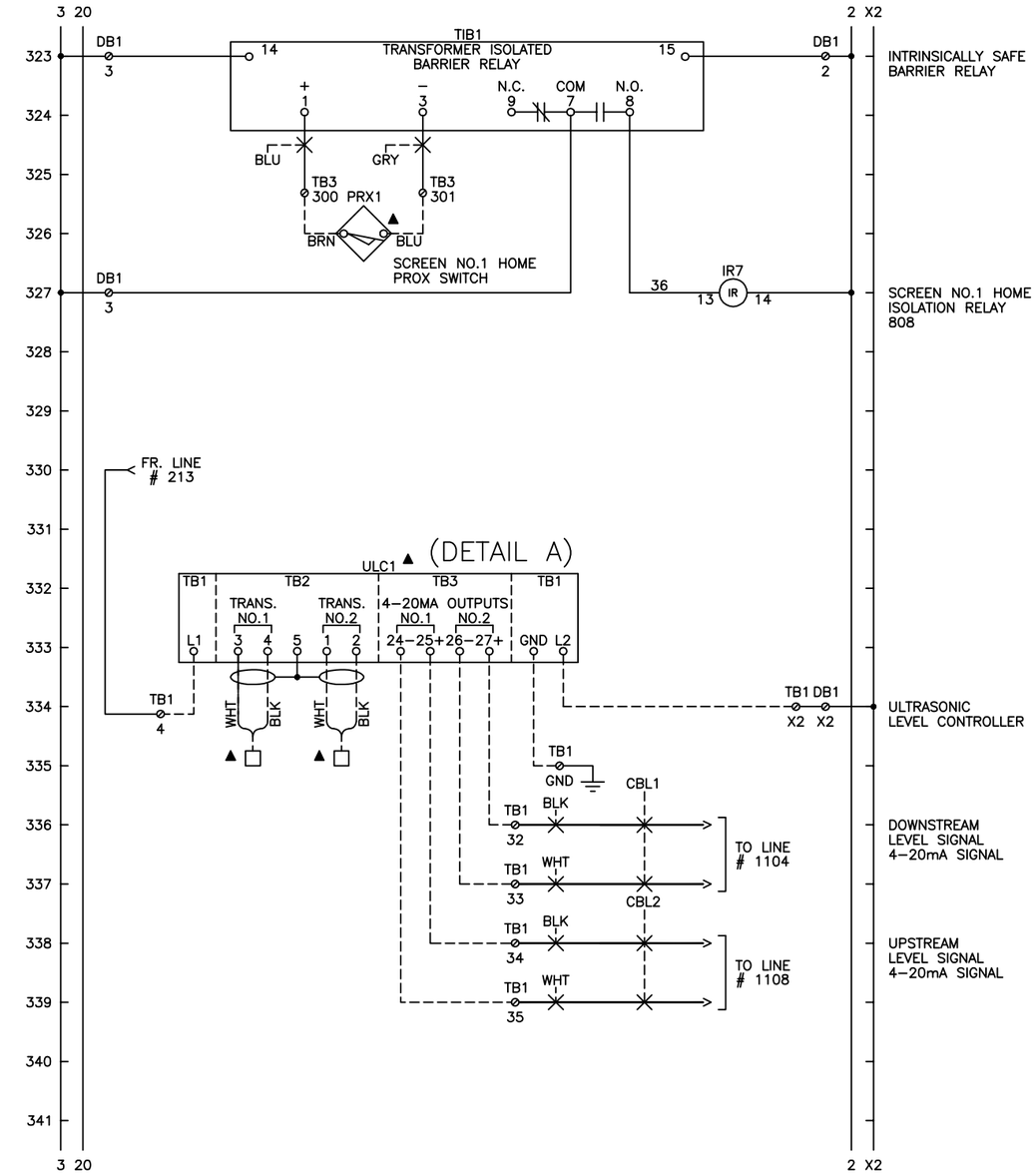

REVISION	BY	CHKD	DATE	LTR
				A
				A
				B
				A
				0

TRIPLE ROTOSCREEN / CONVEYOR / SWP CONTROL PANEL

DESCRIPTION: 5HP, 5HP, 5HP, 5HP, 5HP, 480VAC

TYPE | SIZE

DATE	STD. BY	STD.CHKD.	STD.APPVD	SCALE	DATE	PROJ. BY	PROJ.CHKD.	PROJ.APPVD
				NONE	04/11	BMG	RTH	RTH

ALL COMPONENTS MUST BE FABRICATED AND MACHINED ACCORDING TO WESTECH STANDARD SPECIFICATION (DRAWING P24Z–024A), UNLESS SPECIFICALLY NOTED ON THIS DRAWING.

This drawing is property of WESTECH ENGINEERING, INC. and is transmitted in confidence. Neither receipt nor possession confers or transfers any rights to reproduce, use, or disclose, in whole or in part, data contained herein for any purpose, without the written permission of WESTECH ENGINEERING, INC., Salt Lake City, Utah

WESTECH

DRAWING NUMBER	PROJECT NUMBER	REV.
E1OD	21258ABC	0

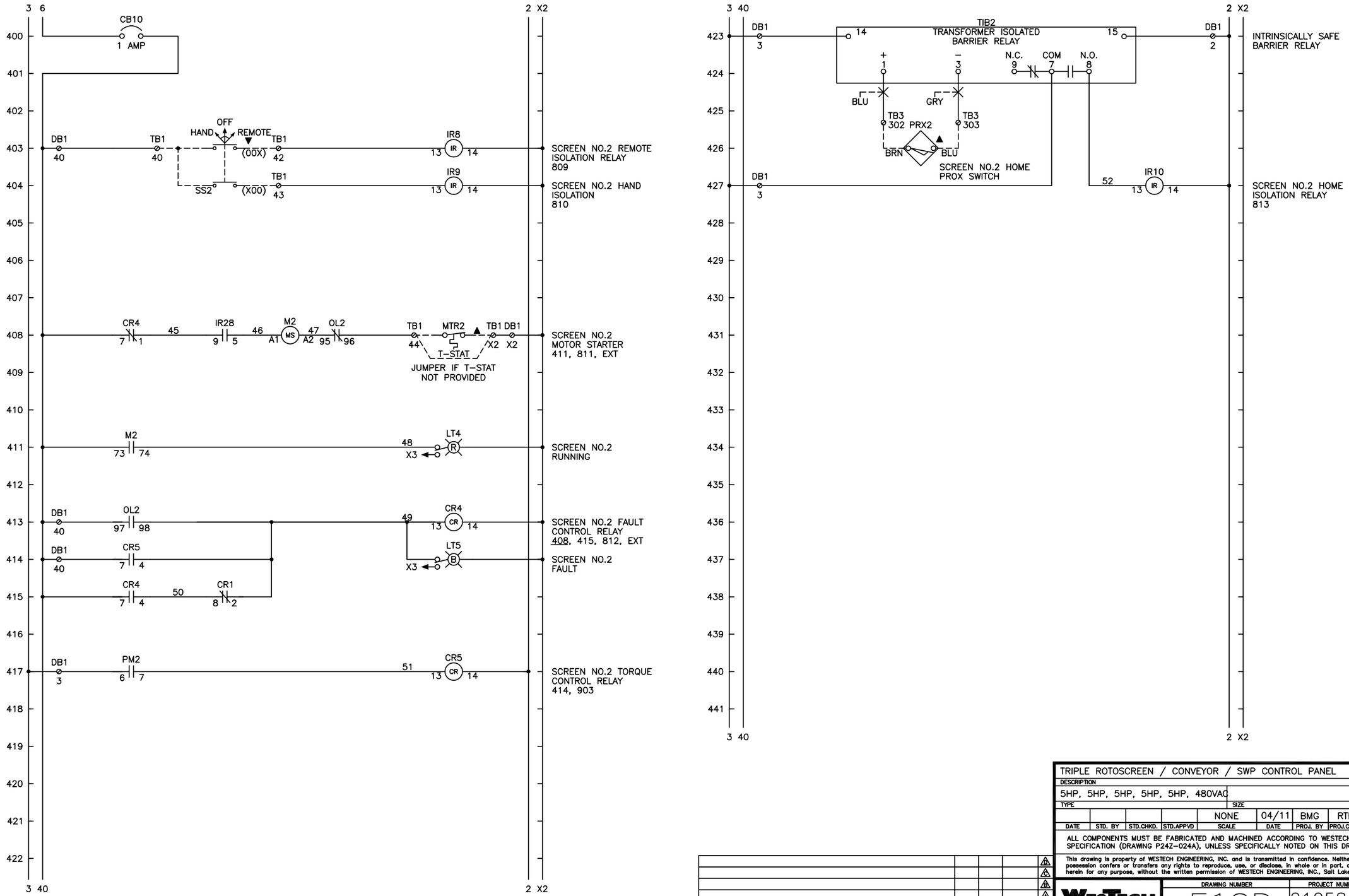

REVISION	BY	CHKD	DATE	LTR
				1
				2
				3
				4

TRIPLE ROTOSCREEN / CONVEYOR / SWP CONTROL PANEL

DESCRIPTION: 5HP, 5HP, 5HP, 5HP, 5HP, 480VAC

TYPE				SIZE				
				NONE	04/11	BMG	RTH	RTH
DATE	STD. BY	STD.CHKD.	STD.APPVD	SCALE	DATE	PROJ. BY	PROJ.CHKD.	PROJ.APPVD

ALL COMPONENTS MUST BE FABRICATED AND MACHINED ACCORDING TO WESTECH STANDARD SPECIFICATION (DRAWING P24Z–024A), UNLESS SPECIFICALLY NOTED ON THIS DRAWING.

This drawing is property of WESTECH ENGINEERING, INC. and is transmitted in confidence. Neither receipt nor possession confers or transfers any rights to reproduce, use, or disclose, in whole or in part, data contained herein for any purpose, without the written permission of WESTECH ENGINEERING, INC., Salt Lake City, Utah

WESTECH

DRAWING NUMBER	PROJECT NUMBER	REV.
E10D	21258ABC	0

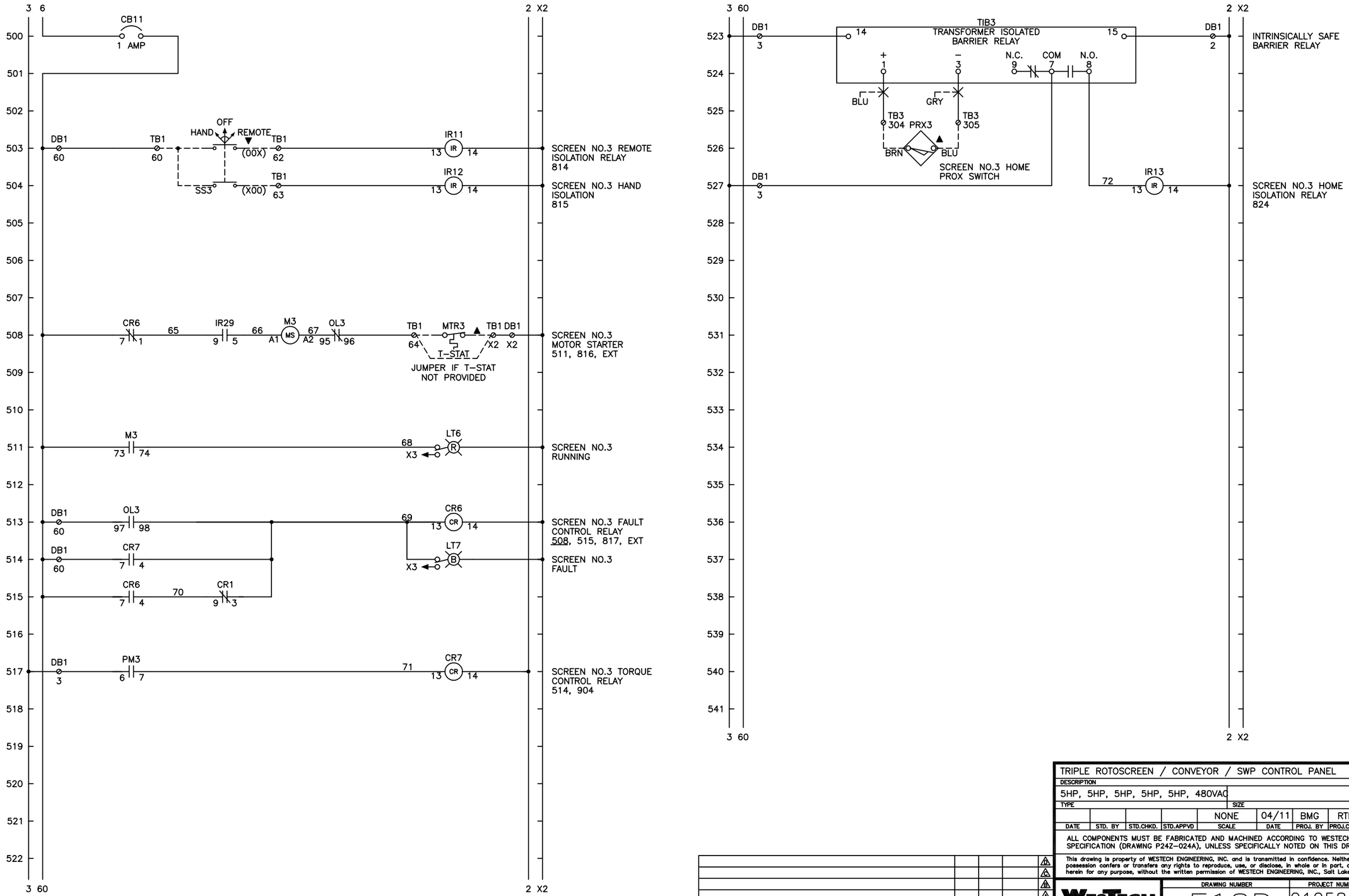

REVISION	BY	CHKD	DATE	LTR
				4
				3
				2
				1
				0

TRIPLE ROTOSCREEN / CONVEYOR / SWP CONTROL PANEL

DESCRIPTION: 5HP, 5HP, 5HP, 5HP, 5HP, 480VAC

TYPE				SIZE				
				NONE	04/11	BMG	RTH	RTH
DATE	STD. BY	STD.CHKD.	STD.APPVD	SCALE	DATE	PROJ. BY	PROJ.CHKD.	PROJ.APPVD

ALL COMPONENTS MUST BE FABRICATED AND MACHINED ACCORDING TO WESTECH STANDARD SPECIFICATION (DRAWING P24Z–024A), UNLESS SPECIFICALLY NOTED ON THIS DRAWING.

This drawing is property of WESTECH ENGINEERING, INC. and is transmitted in confidence. Neither receipt nor possession confers or transfers any rights to reproduce, use, or disclose, in whole or in part, data contained herein for any purpose, without the written permission of WESTECH ENGINEERING, INC., Salt Lake City, Utah

WESTECH

DRAWING NUMBER	PROJECT NUMBER	REV.
E1OD	21258ABC	0

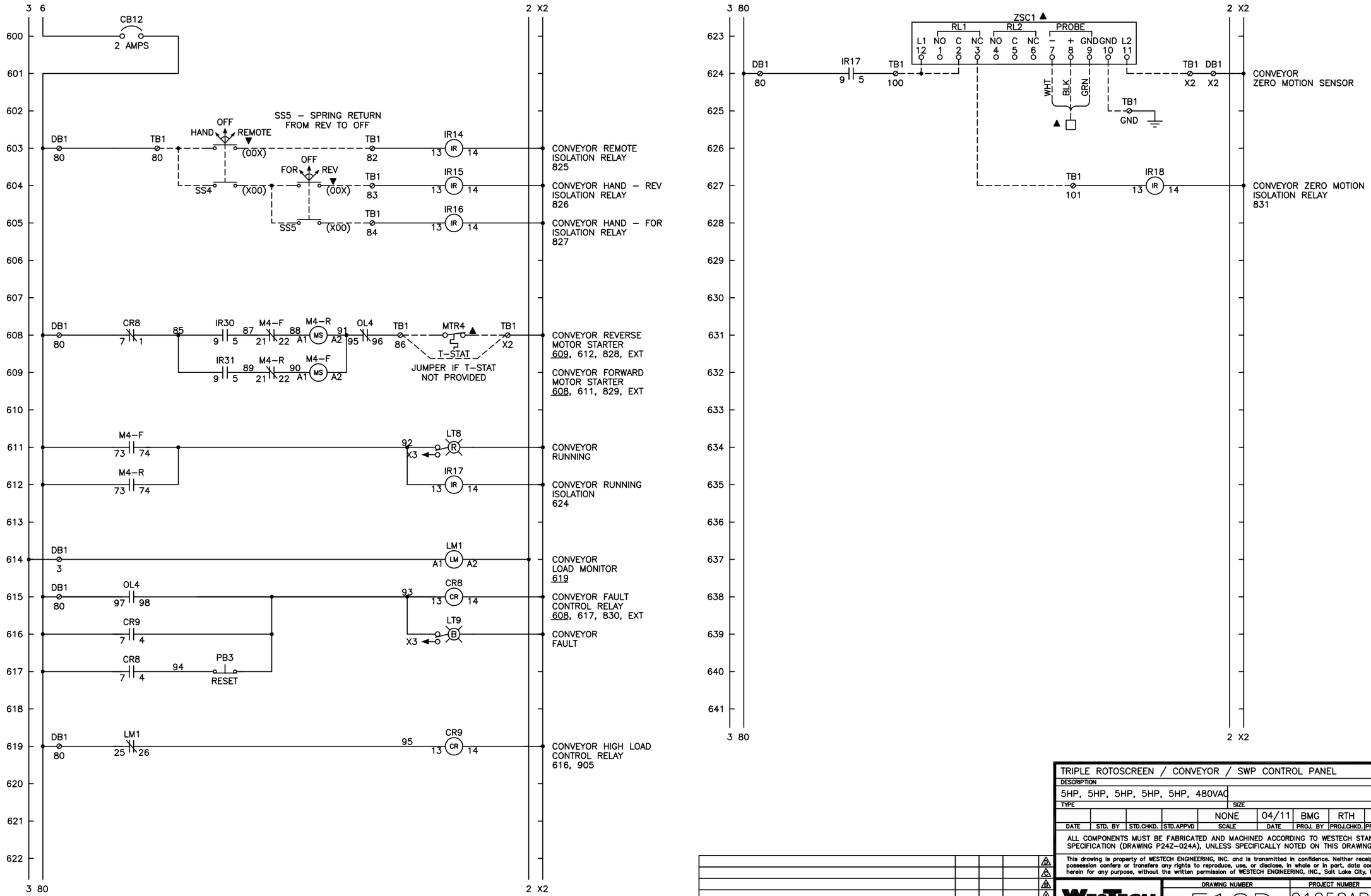

REVISION	BY	CHKD	DATE	LTR
				4
				3
				2
				1
				0

TRIPLE ROTOSCREEN / CONVEYOR / SWP CONTROL PANEL

DESCRIPTION: 5HP, 5HP, 5HP, 5HP, 5HP, 480VAC

TYPE | SIZE

DATE	STD. BY	STD.CHKD.	STD.APPVD	SCALE	DATE	PROJ. BY	PROJ.CHKD.	PROJ.APPVD
				NONE	04/11	BMG	RTH	RTH

ALL COMPONENTS MUST BE FABRICATED AND MACHINED ACCORDING TO WESTECH STANDARD SPECIFICATION (DRAWING P24Z–024A), UNLESS SPECIFICALLY NOTED ON THIS DRAWING.

This drawing is property of WESTECH ENGINEERING, INC. and is transmitted in confidence. Neither receipt nor possession confers or transfers any rights to reproduce, use, or disclose, in whole or in part, data contained herein for any purpose, without the written permission of WESTECH ENGINEERING, INC., Salt Lake City, Utah

WESTECH

DRAWING NUMBER	PROJECT NUMBER	REV.
E10D	21258ABC	0

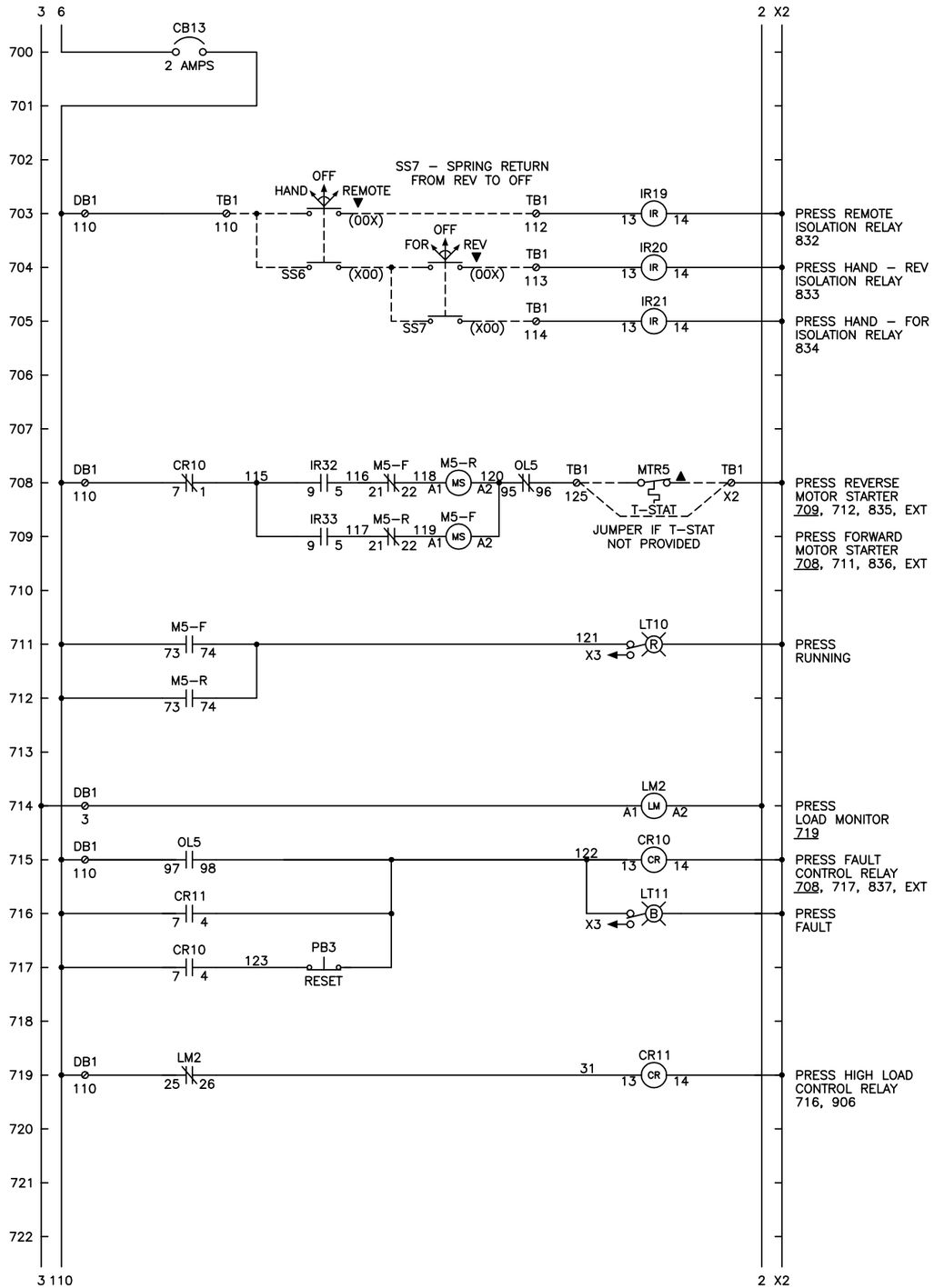

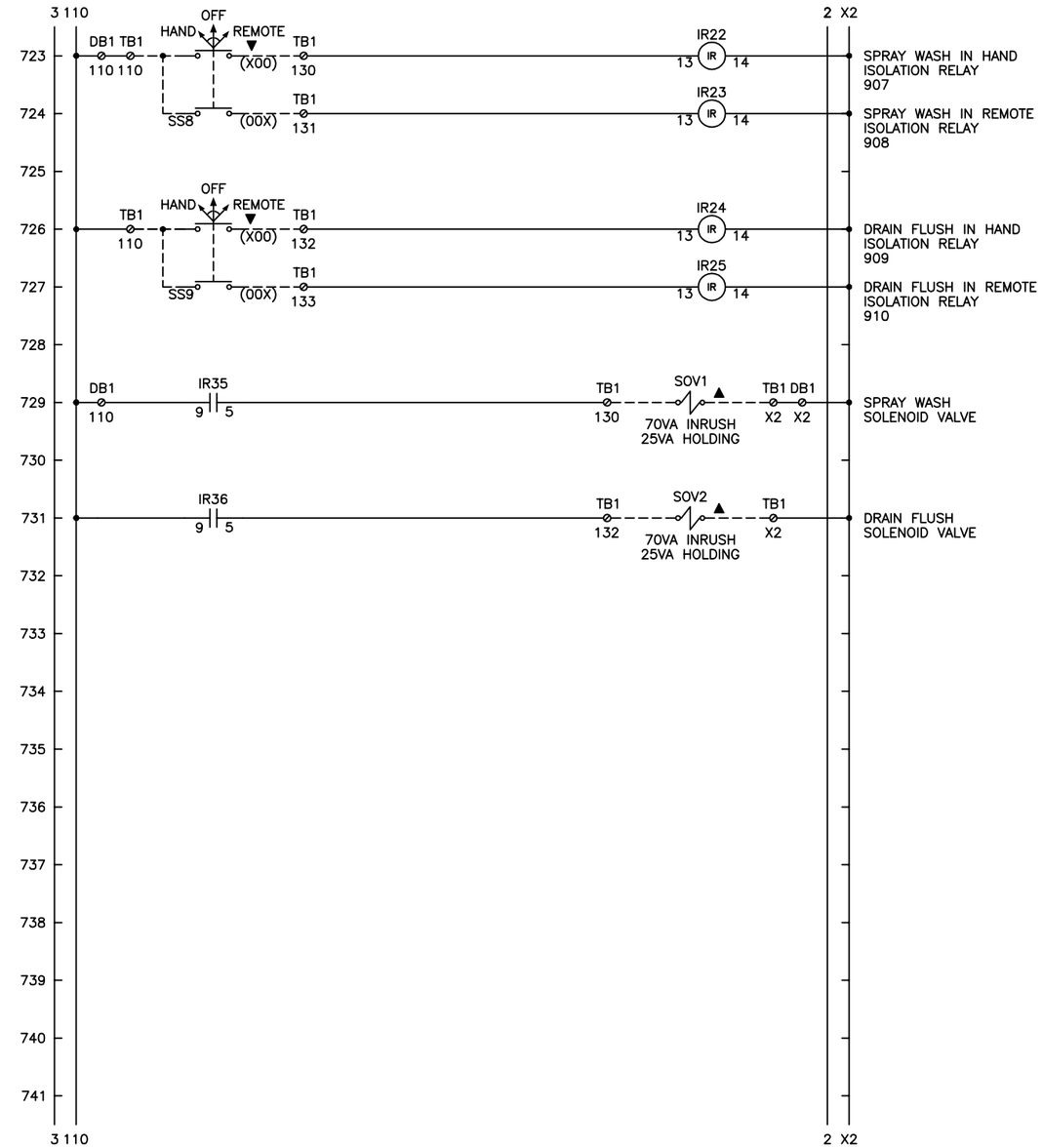

REVISION	BY	CHKD	DATE	LTR
				0
				0
				0
				0
				0

TRIPLE ROTOSCREEN / CONVEYOR / SWP CONTROL PANEL

DESCRIPTION: 5HP, 5HP, 5HP, 5HP, 5HP, 480VAC

TYPE				SIZE				
				NONE	04/11	BMG	RTH	RTH
DATE	STD. BY	STD.CHKD.	STD.APPVD	SCALE	DATE	PROJ. BY	PROJ.CHKD.	PROJ.APPVD

ALL COMPONENTS MUST BE FABRICATED AND MACHINED ACCORDING TO WESTECH STANDARD SPECIFICATION (DRAWING P24Z–024A), UNLESS SPECIFICALLY NOTED ON THIS DRAWING.

This drawing is property of WESTECH ENGINEERING, INC. and is transmitted in confidence. Neither receipt nor possession confers or transfers any rights to reproduce, use, or disclose, in whole or in part, data contained herein for any purpose, without the written permission of WESTECH ENGINEERING, INC., Salt Lake City, Utah

WESTECH

DRAWING NUMBER	PROJECT NUMBER	REV.
E1OD	21258ABC	0

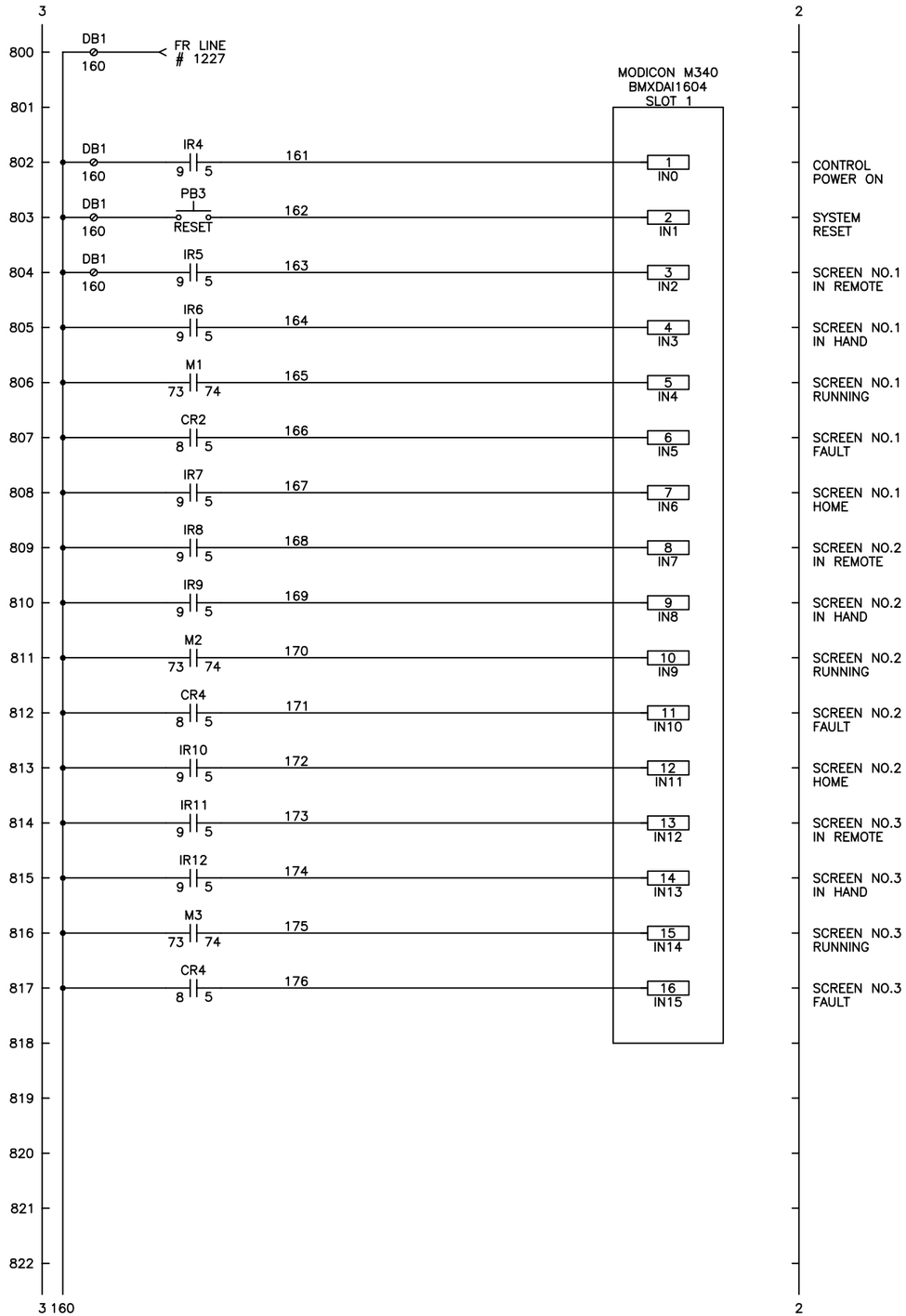

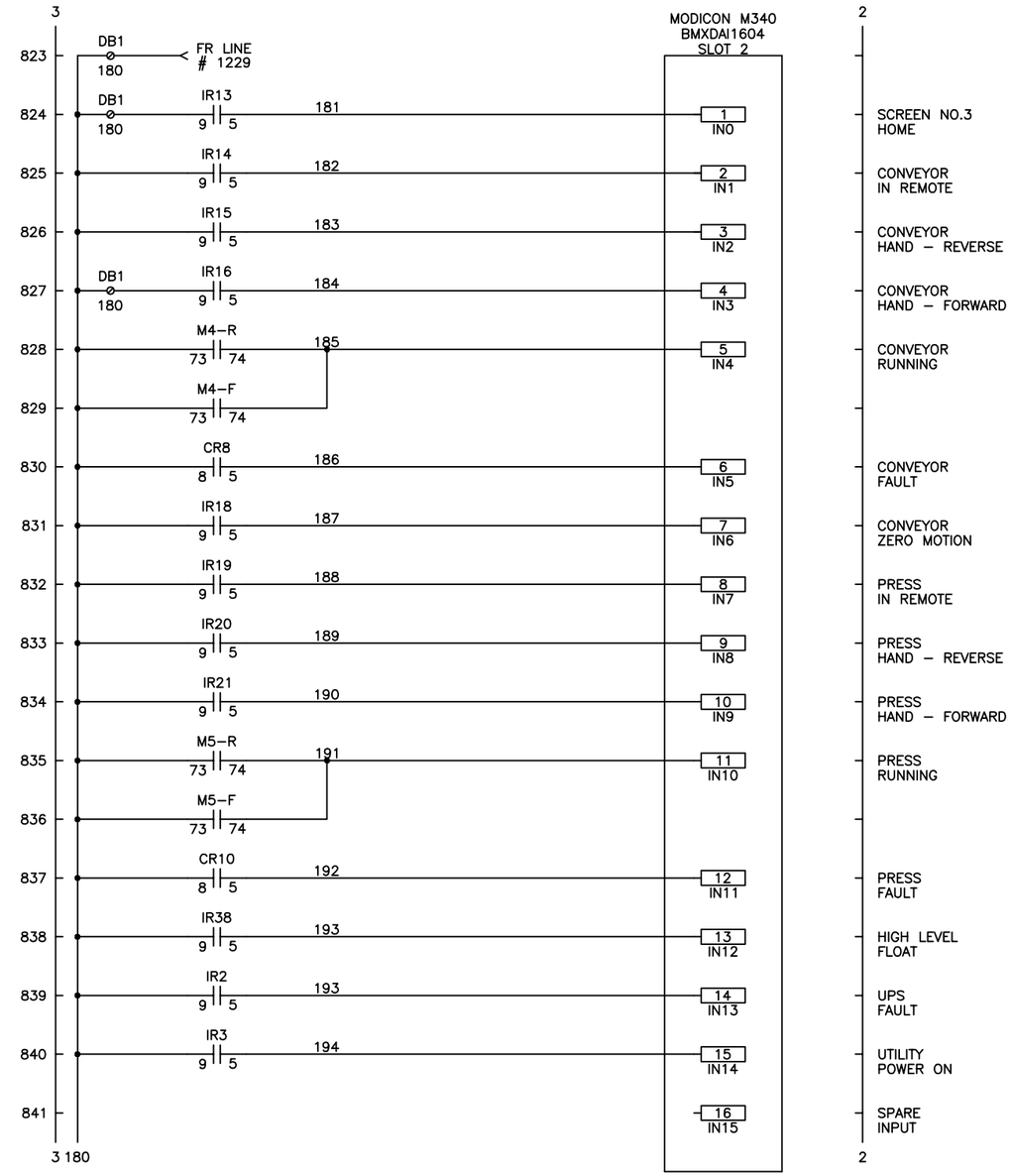

REVISION	BY	CHKD	DATE	LTR
				1
				2
				3
				4
				5

TRIPLE ROTOSCREEN / CONVEYOR / SWP CONTROL PANEL

DESCRIPTION: 5HP, 5HP, 5HP, 5HP, 5HP, 480VAC

TYPE | SIZE

DATE	STD. BY	STD.CHKD.	STD.APPVD	SCALE	DATE	PROJ. BY	PROJ.CHKD.	PROJ.APPVD
				NONE	04/11	BMG	RTH	RTH

ALL COMPONENTS MUST BE FABRICATED AND MACHINED ACCORDING TO WESTECH STANDARD SPECIFICATION (DRAWING P24Z–024A), UNLESS SPECIFICALLY NOTED ON THIS DRAWING.

This drawing is property of WESTECH ENGINEERING, INC. and is transmitted in confidence. Neither receipt nor possession confers or transfers any rights to reproduce, use, or disclose, in whole or in part, data contained herein for any purpose, without the written permission of WESTECH ENGINEERING, INC., Salt Lake City, Utah

WESTECH

DRAWING NUMBER	PROJECT NUMBER	REV.
E1OD	21258ABC	0

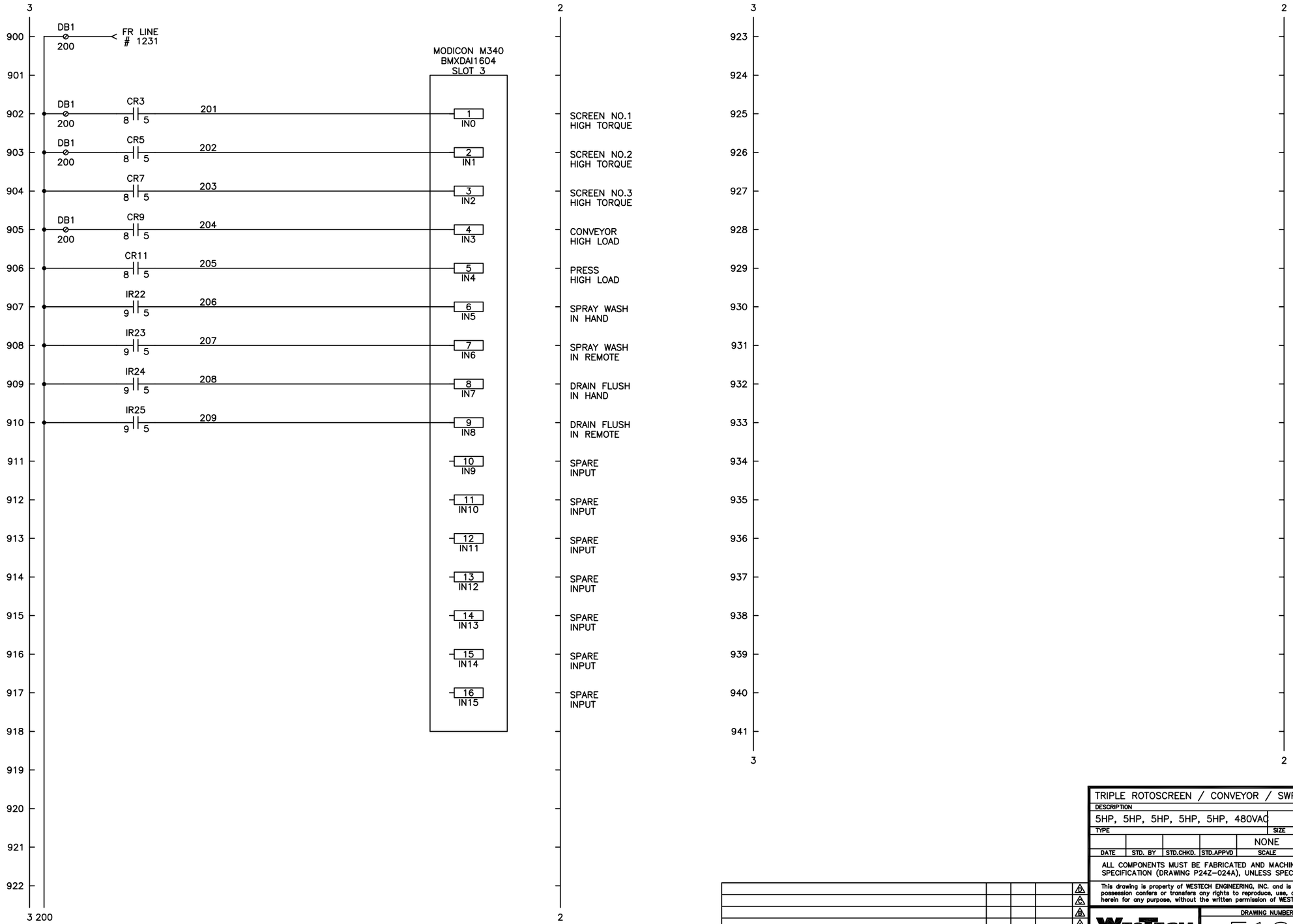

REVISION	BY	CHKD	DATE	LTR
				A
				A
				B
				A
				A

TRIPLE ROTOSCREEN / CONVEYOR / SWP CONTROL PANEL

DESCRIPTION

5HP, 5HP, 5HP, 5HP, 5HP, 480VAC

TYPE | SIZE

DATE	STD. BY	STD.CHKD.	STD.APPVD	SCALE	DATE	PROJ. BY	PROJ.CHKD.	PROJ.APPVD
				NONE	04/11	BMG	RTH	RTH

ALL COMPONENTS MUST BE FABRICATED AND MACHINED ACCORDING TO WESTECH STANDARD SPECIFICATION (DRAWING P24Z-024A), UNLESS SPECIFICALLY NOTED ON THIS DRAWING.

This drawing is property of WESTECH ENGINEERING, INC. and is transmitted in confidence. Neither receipt nor possession confers or transfers any rights to reproduce, use, or disclose, in whole or in part, data contained herein for any purpose, without the written permission of WESTECH ENGINEERING, INC., Salt Lake City, Utah

WESTECH

DRAWING NUMBER	PROJECT NUMBER	REV.
E10D	21258ABC	0

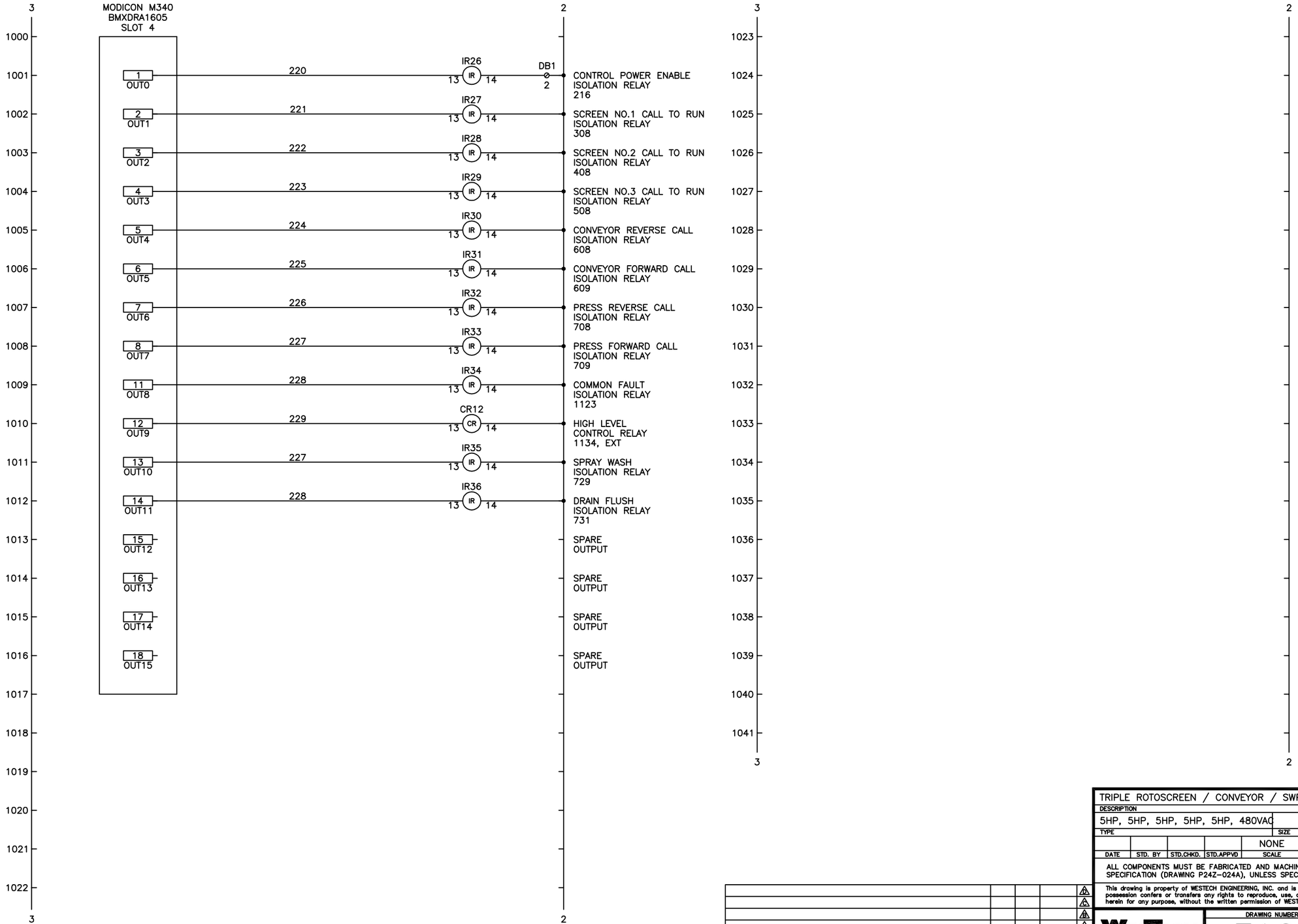

REVISION	BY	CHKD	DATE	LTR
				A
				A
				A
				A

TRIPLE ROTOSCREEN / CONVEYOR / SWP CONTROL PANEL

DESCRIPTION

5HP, 5HP, 5HP, 5HP, 5HP, 480VAC

TYPE | SIZE

DATE	STD. BY	STD.CHKD.	STD.APPVD	SCALE	DATE	PROJ. BY	PROJ.CHKD.	PROJ.APPVD
				NONE	04/11	BMG	RTH	RTH

ALL COMPONENTS MUST BE FABRICATED AND MACHINED ACCORDING TO WESTECH STANDARD SPECIFICATION (DRAWING P24Z-024A), UNLESS SPECIFICALLY NOTED ON THIS DRAWING.

This drawing is property of WESTECH ENGINEERING, INC. and is transmitted in confidence. Neither receipt nor possession confers or transfers any rights to reproduce, use, or disclose, in whole or in part, data contained herein for any purpose, without the written permission of WESTECH ENGINEERING, INC., Salt Lake City, Utah

WESTECH

DRAWING NUMBER	PROJECT NUMBER	REV.
E1OD	21258ABC	0

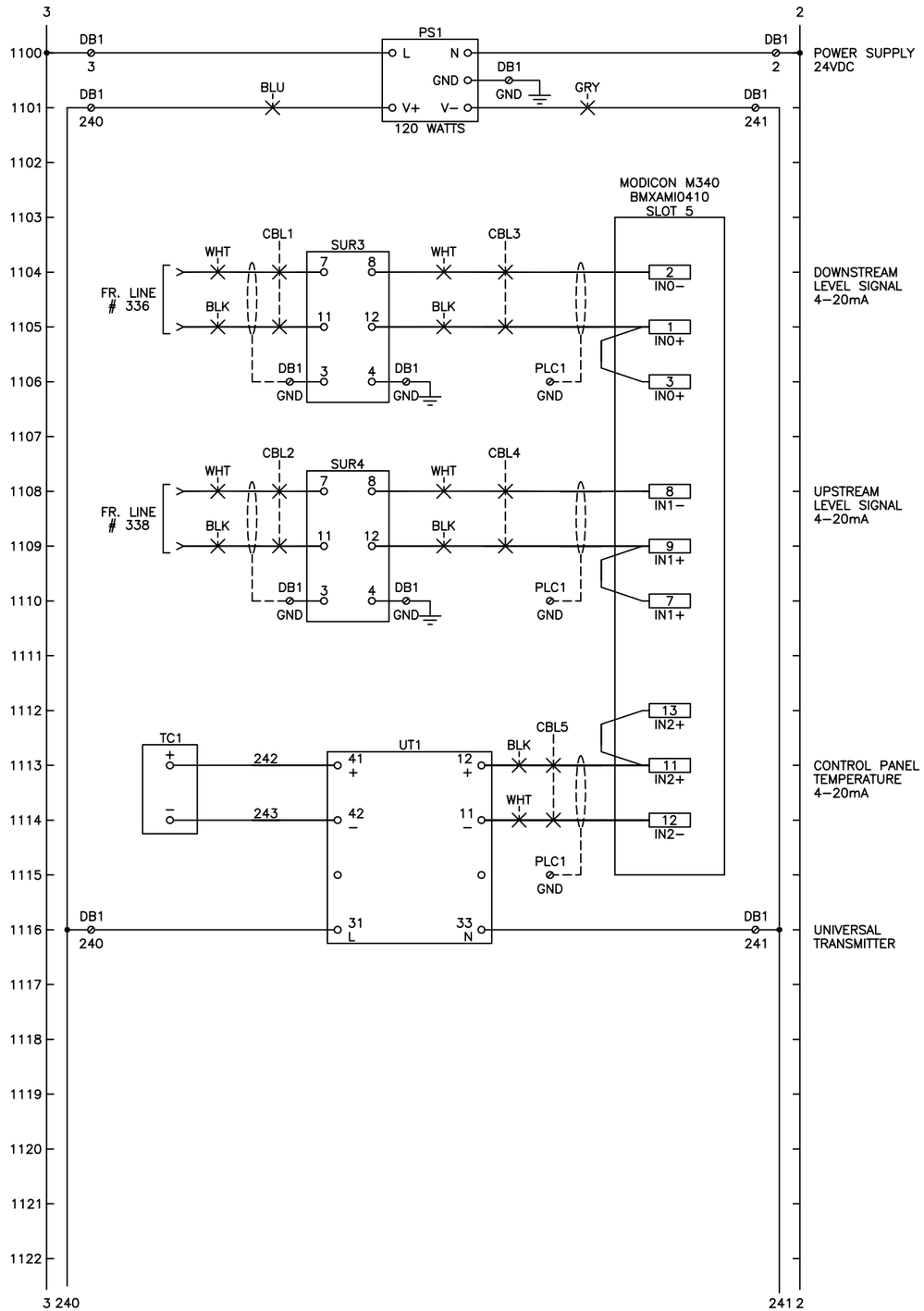

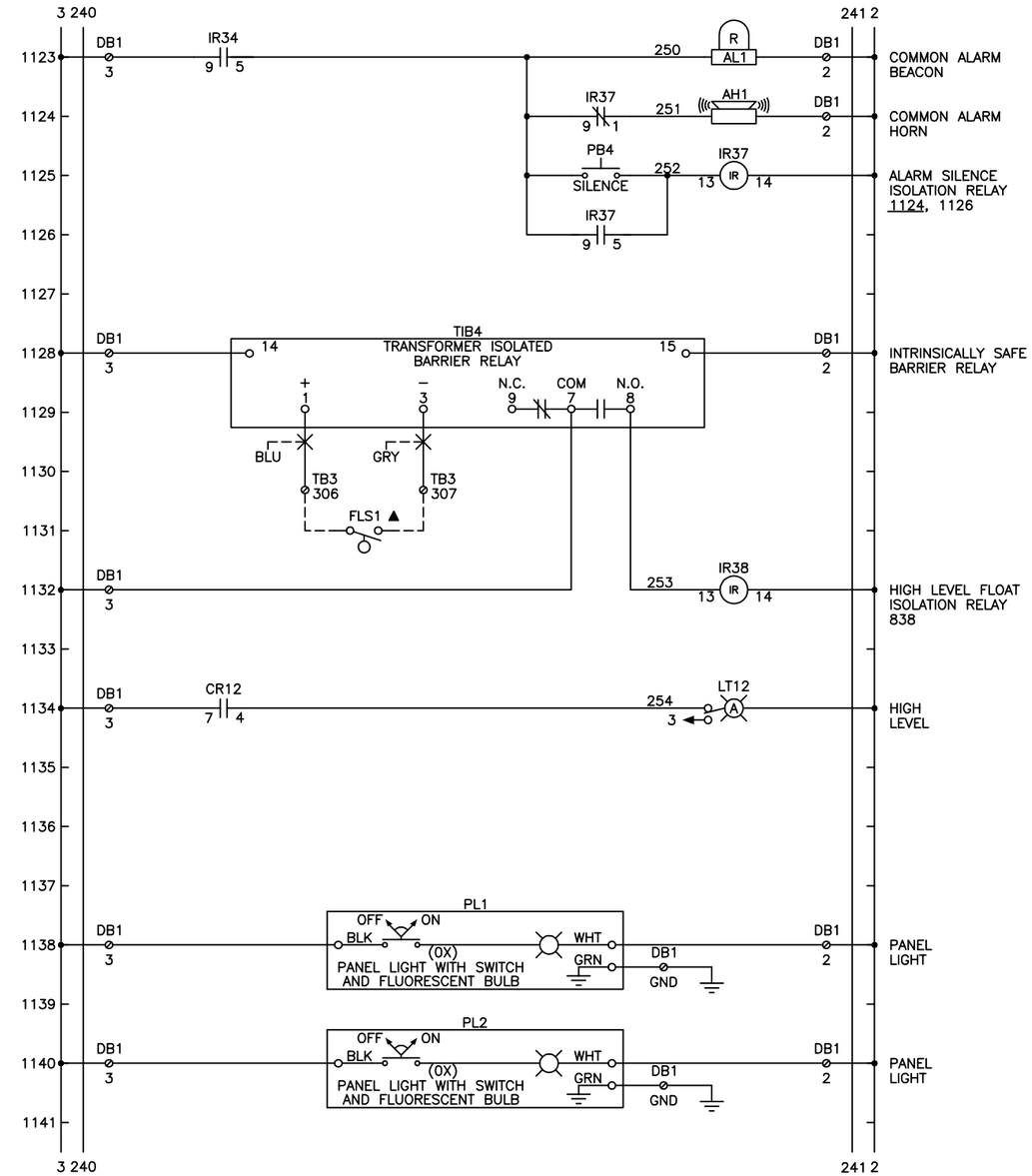

TRIPLE ROTOSCREEN / CONVEYOR / SWP CONTROL PANEL

DESCRIPTION: 5HP, 5HP, 5HP, 5HP, 5HP, 480VAC

TYPE | SIZE

DATE	STD. BY	STD.CHKD.	STD.APPVD	SCALE	DATE	PROJ. BY	PROJ.CHKD.	PROJ.APPVD
				NONE	04/11	BMG	RTH	RTH

ALL COMPONENTS MUST BE FABRICATED AND MACHINED ACCORDING TO WESTECH STANDARD SPECIFICATION (DRAWING P24Z–024A), UNLESS SPECIFICALLY NOTED ON THIS DRAWING.

This drawing is property of WESTECH ENGINEERING, INC. and is transmitted in confidence. Neither receipt nor possession confers or transfers any rights to reproduce, use, or disclose, in whole or in part, data contained herein for any purpose, without the written permission of WESTECH ENGINEERING, INC., Salt Lake City, Utah

REVISION	BY	CHKD	DATE	LTR
				0
				0
				0
				0
				0

WESTECH

DRAWING NUMBER	PROJECT NUMBER	REV.
E10D	21258ABC	0

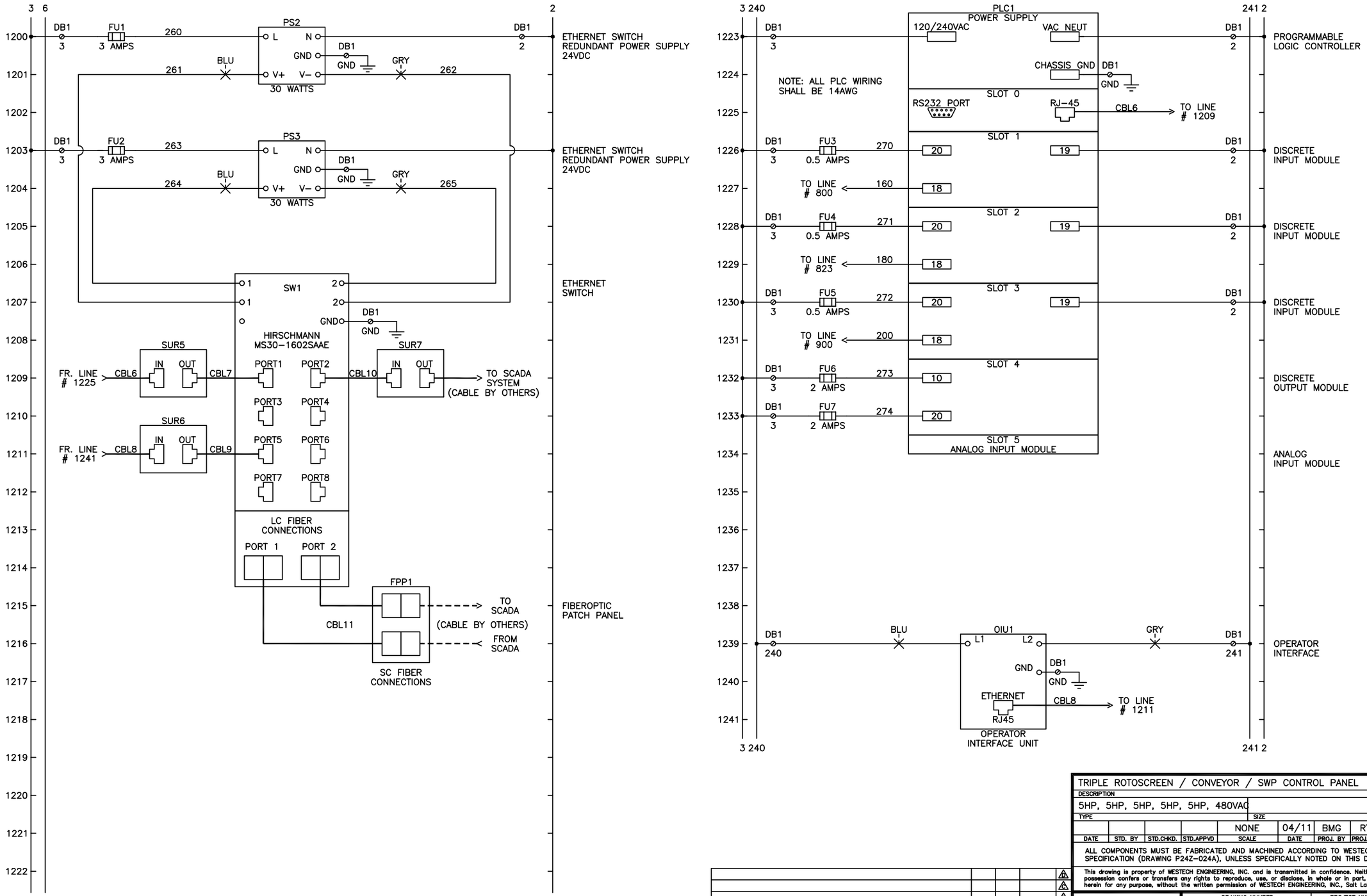

				4
				3
				2
				1
REVISION	BY	CHKD	DATE	LTR

TRIPLE ROTOSCREEN / CONVEYOR / SWP CONTROL PANEL

DESCRIPTION

5HP, 5HP, 5HP, 5HP, 5HP, 480VAC

TYPE | SIZE

DATE	STD. BY	STD.CHKD.	STD.APPVD	SCALE	DATE	PROJ. BY	PROJ.CHKD.	PROJ.APPVD
				NONE	04/11	BMG	RTH	RTH

ALL COMPONENTS MUST BE FABRICATED AND MACHINED ACCORDING TO WESTECH STANDARD SPECIFICATION (DRAWING P24Z-024A), UNLESS SPECIFICALLY NOTED ON THIS DRAWING.

This drawing is property of WESTECH ENGINEERING, INC. and is transmitted in confidence. Neither receipt nor possession confers or transfers any rights to reproduce, use, or disclose, in whole or in part, data contained herein for any purpose, without the written permission of WESTECH ENGINEERING, INC., Salt Lake City, Utah

WESTECH

DRAWING NUMBER	PROJECT NUMBER	REV.
E1OD	21258ABC	0

FIELD WIRING DIAGRAM

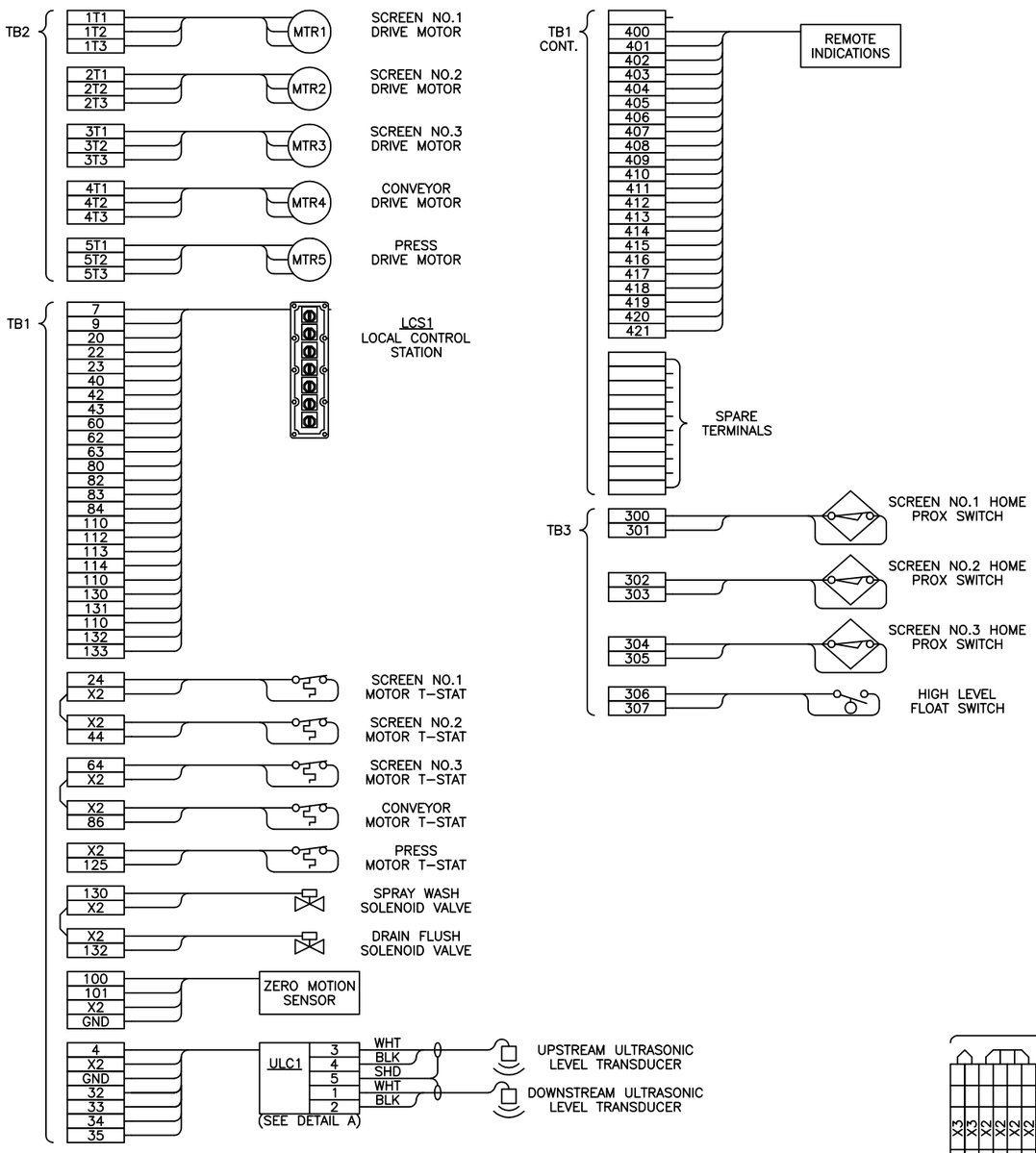

FIELD WIRING DIAGRAM

TIB1–3 WIRING DETAIL

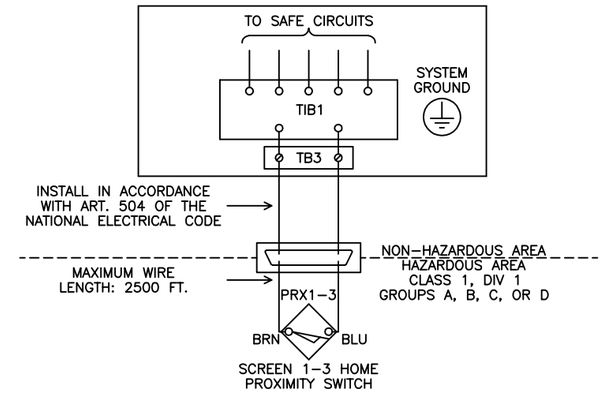

NOTES:
1. ENSURE CONTROL PANEL IS CONNECTED TO GROUND.
2. CAUTION: MAINTAIN SEPARATION BETWEEN INTRINSICALLY SAFE WIRING AND OTHER WIRING.

TIB4 WIRING DETAIL

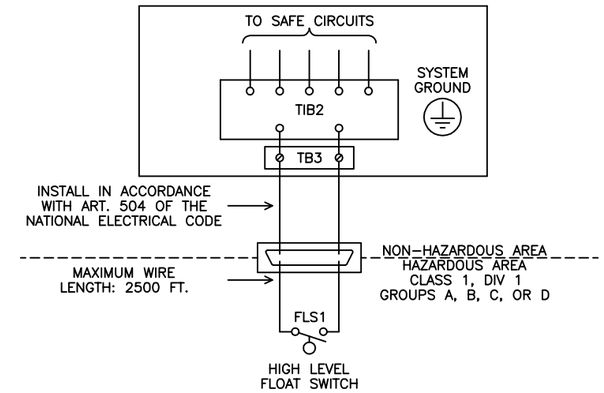

NOTES:
1. ENSURE CONTROL PANEL IS CONNECTED TO GROUND.
2. CAUTION: MAINTAIN SEPARATION BETWEEN INTRINSICALLY SAFE WIRING AND OTHER WIRING.

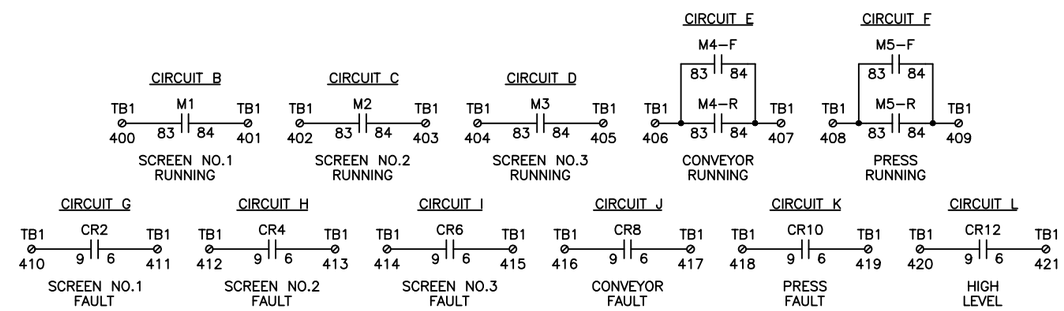

MAX. CONTROLLED LOAD: 10A @ 120VAC

NOTE: BRANCH CIRCUIT PROTECTION PROVIDED BY OTHERS PER N.E.C.

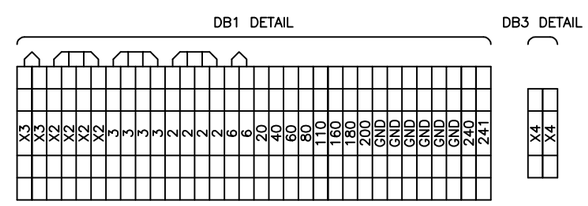

REVISION	BY	CHKD	DATE	LTR
				4
				3
				2
				1

TRIPLE ROTOSCREEN / CONVEYOR / SWP CONTROL PANEL

DESCRIPTION: 5HP, 5HP, 5HP, 5HP, 5HP, 480VAC

TYPE				SIZE				
				NONE	04/11	BMG	RTH	RTH
DATE	STD. BY	STD.CHKD.	STD.APPVD	SCALE	DATE	PROJ. BY	PROJ.CHKD.	PROJ.APPVD

ALL COMPONENTS MUST BE FABRICATED AND MACHINED ACCORDING TO WESTECH STANDARD SPECIFICATION (DRAWING P24Z-024A), UNLESS SPECIFICALLY NOTED ON THIS DRAWING.

This drawing is property of WESTECH ENGINEERING, INC. and is transmitted in confidence. Neither receipt nor possession confers or transfers any rights to reproduce, use, or disclose, in whole or in part, data contained herein for any purpose, without the written permission of WESTECH ENGINEERING, INC., Salt Lake City, Utah

WESTECH

DRAWING NUMBER	PROJECT NUMBER	REV.
E1OD	21258ABC	0

DEVICE SETTINGS

BMXP342020	DISCRETE IN	DISCRETE OUT	ANALOG IN
☐ RUN	0 1 2 3	0 1 2 3	☐ POWER
☐ ERR	4 5 6 7	4 5 6 7	
☐ I/O	8 9 10 11	8 9 10 11	
☐ SER COM	12 13 14 15	12 13 14 15	
☐ CARD ERR			
☐ ETH ACT	QTY: 3	QTY: 1	QTY: 1
☐ ETH ERR	SLOT 1–3	SLOT 4	SLOT 5

SLOT 1 – DISCRETE INPUTS

IN0	CONTROL POWER ON
IN1	SYSTEM RESET
IN2	SCREEN NO.1 IN REMOTE
IN3	SCREEN NO.1 IN HAND
IN4	SCREEN NO.1 RUNNING
IN5	SCREEN NO.1 FAULT
IN6	SCREEN NO.1 HOME
IN7	SCREEN NO.2 IN REMOTE
IN8	SCREEN NO.2 IN HAND
IN9	SCREEN NO.2 RUNNING
IN10	SCREEN NO.2 FAULT
IN11	SCREEN NO.2 HOME
IN12	SCREEN NO.3 IN REMOTE
IN13	SCREEN NO.3 IN HAND
IN14	SCREEN NO.3 RUNNING
IN15	SCREEN NO.3 FAULT

SLOT 2 – DISCRETE INPUTS

IN0	SCREEN NO.3 HOME
IN1	CONVEYOR IN REMOTE
IN2	CONVEYOR HAND–REVERSE
IN3	CONVEYOR HAND–FORWARD
IN4	CONVEYOR RUNNING
IN5	CONVEYOR FAULT
IN6	CONVEYOR ZERO MOTION
IN7	PRESS IN REMOTE
IN8	PRESS HAND–REVERSE
IN9	PRESS HAND–FORWARD
IN10	PRESS RUNNING
IN11	PRESS FAULT
IN12	HIGH LEVEL FLOAT
IN13	UPS FAULT
IN14	UTILITY POWER ON
IN15	SPARE

SLOT 3 – DISCRETE INPUTS

IN0	SCREEN NO.1 HIGH TORQUE
IN1	SCREEN NO.2 HIGH TORQUE
IN2	SCREEN NO.3 HIGH TORQUE
IN3	CONVEYOR HIGH LOAD
IN4	PRESS HIGH LOAD
IN5	SPRAY WASH IN HAND
IN6	SPRAY WASH IN REMOTE
IN7	DRAIN FLUSH IN HAND
IN8	DRAIN FLUSH IN REMOTE
IN9	SPARE
IN10	SPARE
IN11	SPARE
IN12	SPARE
IN13	SPARE
IN14	SPARE
IN15	SPARE

SLOT 4 – DISCRETE OUTPUTS

OUT0	CONTROL POWER ENABLE
OUT1	SCREEN NO.1 CALL TO RUN
OUT2	SCREEN NO.2 CALL TO RUN
OUT3	SCREEN NO.3 CALL TO RUN
OUT4	CONVEYOR REVERSE CALL TO RUN
OUT5	CONVEYOR FORWARD CALL TO RUN
OUT6	PRESS REVERSE CALL TO RUN
OUT7	PRESS FORWARD CALL TO RUN
OUT8	COMMON FAULT
OUT9	HIGH LEVEL
OUT10	SPRAY WASH CALL TO RUN
OUT11	DRAIN FLUSH CALL TO RUN
OUT12	SPARE
OUT13	SPARE
OUT14	SPARE
OUT15	SPARE

SLOT 5 – ANALOG INPUTS

IN0	DOWNSTREAM LEVEL
IN1	UPSTREAM LEVEL
IN2	PANEL TEMPERATURE
IN3	SPARE

PLC1 – COMMUNICATIONS SETUP

CHANNEL 0 – SYSTEM

PARAMETER	VALUE
DRIVER	DF1 FULL DUPLEX
BAUD RATE	9600
PARITY	EVEN
STOP BITS	1
SOURCE ID	1
CONTROL LINE	NO HANDSHAKING
ERROR DETECTION	BCC
EMBEDDED RESPONSES	ENABLED

CHANNEL 1 – SYSTEM

PARAMETER	LCP–102	LCP–103
IP ADDRESS	TBD	TBD
SUBNET MASK	TBD	TBD
GATEWAY ADDRESS	TBD	TBD
DNS PREFERRED	TBD	TBD
DNS ALTERNATE	TBD	TBD
BOOTP ENABLE	NO	NO

DEVICE SETTINGS

PLC1 – SCADA INTERFACE

REGISTER NUMBER	DESCRIPTION	DATA TYPE	FUNCTION
TBD	EMERGENCY STOP PRESSED	BIT	TO SCADA
TBD	SCREEN NO.1 HIGH TORQUE	BIT	TO SCADA
TBD	SCREEN NO.1 IN REMOTE	BIT	TO SCADA
TBD	SCREEN NO.1 IN HAND	BIT	TO SCADA
TBD	SCREEN NO.1 RUNNING	BIT	TO SCADA
TBD	SCREEN NO.1 FAULT	BIT	TO SCADA
TBD	SCREEN NO.2 HIGH TORQUE	BIT	TO SCADA
TBD	SCREEN NO.2 IN REMOTE	BIT	TO SCADA
TBD	SCREEN NO.2 IN HAND	BIT	TO SCADA
TBD	SCREEN NO.2 RUNNING	BIT	TO SCADA
TBD	SCREEN NO.2 FAULT	BIT	TO SCADA
TBD	SCREEN NO.3 HIGH TORQUE	BIT	TO SCADA
TBD	SCREEN NO.3 IN REMOTE	BIT	TO SCADA
TBD	SCREEN NO.3 IN HAND	BIT	TO SCADA
TBD	SCREEN NO.3 RUNNING	BIT	TO SCADA
TBD	SCREEN NO.3 FAULT	BIT	TO SCADA
TBD	CONVEYOR ZERO MOTION	BIT	TO SCADA
TBD	CONVEYOR IN REMOTE	BIT	TO SCADA
TBD	CONVEYOR IN HAND–FORWARD	BIT	TO SCADA
TBD	CONVEYOR IN HAND–REVERSE	BIT	TO SCADA
TBD	CONVEYOR RUNNING	BIT	TO SCADA
TBD	CONVEYOR FAULT	BIT	TO SCADA
TBD	PRESS IN REMOTE	BIT	TO SCADA
TBD	PRESS IN HAND–FORWARD	BIT	TO SCADA
TBD	PRESS IN HAND–REVERSE	BIT	TO SCADA
TBD	PRESS RUNNING	BIT	TO SCADA
TBD	PRESS FAULT	BIT	TO SCADA
TBD	HIGH LEVEL FLOAT SWITCH	BIT	TO SCADA
TBD	SCREEN DIFFERENTIAL LEVEL	INTEGER	TO SCADA
TBD	SCREEN UPSTREAM LEVEL	INTEGER	TO SCADA
TBD	SCREEN DOWNSTREAM LEVEL	INTEGER	TO SCADA
TBD	SCREEN NO.1 NUMBER OF STARTS	INTEGER	TO SCADA
TBD	SCREEN NO.1 RUNTIME (0.1 HOUR INCREMENTS)	INTEGER	TO SCADA
TBD	SCREEN NO.2 NUMBER OF STARTS	INTEGER	TO SCADA
TBD	SCREEN NO.2 RUNTIME (0.1 HOUR INCREMENTS)	INTEGER	TO SCADA
TBD	SCREEN NO.3 NUMBER OF STARTS	INTEGER	TO SCADA
TBD	SCREEN NO.3 RUNTIME (0.1 HOUR INCREMENTS)	INTEGER	TO SCADA
TBD	CONVEYOR NUMBER OF STARTS	INTEGER	TO SCADA
TBD	CONVEYOR RUNTIME (0.1 HOUR INCREMENTS)	INTEGER	TO SCADA
TBD	PRESS NUMBER OF STARTS	INTEGER	TO SCADA
TBD	PRESS RUNTIME (0.1 HOUR INCREMENTS)	INTEGER	TO SCADA
TBD	CONTROL PANEL TEMPERATURE (0–100°C)	INTEGER	TO SCADA
TBD	POWER FAIL BIT (HEARTBEAT)	BIT	TO SCADA

PLC1 – SETTINGS

REGISTER NUMBER	DESCRIPTION	TIMER RESOLUTION	FACTORY SETTINGS
%MW700	SCREEN AUTO STEP COUNTER	STEPS	1
%MW702	SCREEN DWELL TIME	MIN:SEC	00:15
%MW704	SCREEN REPEAT CYCLE OFF TIME	HR:MIN	08:00
%MW706	SCREEN HIGH LEVEL OFF DELAY TIME	MIN:SEC	00:30
%MW708	SCREEN CYCLE COUNTER (STARTS CONVEYOR)	CYCLES	10
%MW710	CONVEYOR OFF DELAY TIMER	MIN:SEC	00:30
%MW712	CONVEYOR ACCUMULATED RUN TIME	MIN:SEC	05:00
%MW714	PRESS INITIAL RUN TIME	MIN:SEC	00:03
%MW716	PRESS FORWARD RUN TIME	MIN:SEC	00:10
%MW718	PRESS FOR–REV DWELL RUN TIME	MIN:SEC	00:02
%MW720	PRESS REVERSE RUN TIME	MIN:SEC	00:00
%MW722	PRESS REV–FOR RUN TIME	MIN:SEC	00:00
%MW724	SPRAY WASH RUN TIME	MIN:SEC	00:05
%MW726	PRESS WASH CYCLE COUNTER	CYCLES	6
%MW728	PRESS DISCHARGE TIME	MIN:SEC	00:30
%MW730	DRAIN FLUSH RUN TIME	MIN:SEC	00:10

NOTES:
1. ABOVE IS A LISTING OF ALL THE FIELD SELECTABLE SETTINGS IN THE CONTROLLER.

DEVICE SETTINGS

AC1

AC COMP. ON/OFF	70 °F

LM1–2 – MOTOR LOAD MONITOR

DIAL	SETTING
COS MAX	MIN
COS MIN	MIN
TIME S	MIN
TIME R	MIN

NOTES:
1. THE LOAD MONITOR DIAL SHALL BE SET TO MINIMUM FROM THE FACTORY.
2. FIELD CONFIGURATION SHALL BE PERFORMED BY THE STARTUP TECHNICIAN PER THE APPROPRIATE TECHNICAL DOCUMENT.

TIB1–4

DIP SWITCH	SET AT
S1	I
S2	I
S3	I

OIU1 – COMMUNICATIONS SETUP

CHANNEL 0 – SYSTEM

PARAMETER	VALUE
DRIVER	DF1 FULL DUPLEX
BAUD RATE	9600
PARITY	EVEN
STOP BITS	1
SOURCE ID	1
CONTROL LINE	NO HANDSHAKING
ERROR DETECTION	BCC
EMBEDDED RESPONSES	ENABLED

CHANNEL 1 – SYSTEM

PARAMETER	LCP–102	LCP–103
IP ADDRESS	TBD	TBD
SUBNET MASK	TBD	TBD
GATEWAY ADDRESS	TBD	TBD
DNS PREFERRED	TBD	TBD
DNS ALTERNATE	TBD	TBD
BOOTP ENABLE	NO	NO

SW1 – COMMUNICATION SETUP

PARAMETER	LCP–102	LCP–103
IP ADDRESS	TBD	TBD
SUBNET MASK	TBD	TBD
GATEWAY ADDRESS	TBD	TBD
DNS PREFERRED	TBD	TBD
DNS ALTERNATE	TBD	TBD
BOOTP ENABLE	NO	NO

REVISION	BY	CHKD	DATE	LTR
				4
				3
				2
				1
				0

TRIPLE ROTOSCREEN / CONVEYOR / SWP CONTROL PANEL

DESCRIPTION

5HP, 5HP, 5HP, 5HP, 5HP, 480VAC

TYPE | SIZE

DATE	STD. BY	STD.CHKD.	STD.APPVD	SCALE	DATE	PROJ. BY	PROJ.CHKD.	PROJ.APPVD
				NONE	04/11	BMG	RTH	RTH

ALL COMPONENTS MUST BE FABRICATED AND MACHINED ACCORDING TO WESTECH STANDARD SPECIFICATION (DRAWING P24Z–024A), UNLESS SPECIFICALLY NOTED ON THIS DRAWING.

This drawing is property of WESTECH ENGINEERING, INC. and is transmitted in confidence. Neither receipt nor possession confers or transfers any rights to reproduce, use, or disclose, in whole or in part, data contained herein for any purpose, without the written permission of WESTECH ENGINEERING, INC., Salt Lake City, Utah

WESTECH

DRAWING NUMBER: E1OD | PROJECT NUMBER: 21258ABC | REV. 0

DEVICE SETTINGS

PM1–3

WINDOW NUMBER	FUNCTION DESCRIPTION	DEFAULT	FACTORY SETTING
04	PARAMETER LOCK	369	
05	MONITOR TYPE	OVERLOAD	
11	MAIN ALARM	100%	*
12	PRE–ALARM	100%	*
21	MAIN ALARM MARGIN	16%	10%
22	PRE–ALARM MARGIN	8%	5%
31	START–UP DELAY	2 SEC.	
32	RESPONSE DELAY	0.5 SEC.	
33	HYSTERESIS	0%	
41	MOTOR RATED POWER	3.0 HP	5.0 HP
42	MOTOR RATER CURRENT	5.6 AMP	7.6 AMP
61	MAIN ALARM LATCHED	OFF	
62	ALARM AT ZERO CURRENT	OFF	
63	MAIN ALARM (NO/NC)	NC	
64	PRE–ALARM (NO/NC)	NO	

NOTES:
1. FACTORY SETTING '*' NOTES PARAMTERS SET IN THE FIELD.
2. RELAYS CHANGE TO PROGRAMMED STATE ON POWER–UP.
3. THE ABOVE IS A PARTIAL PARAMETER LIST AND THEIR SETTINGS. FOR A COMPLETE LIST REFER TO THE OWNERS MANUAL.

UT1 – SETPOINTS

WINDOW NUMBER	FUNCTION DESCRIPTION	DEFAULT SETTING	SHOP SETTINGS	FIELD SETTINGS
TXT 3	INPUT TYPE	VOLT	LIN RESIST	LIN RESIST
TXT 4	INPUT RANGE	2–10	4–20	4–20
TXT 9	UNITS OF MEASURE	°C	°C	°C
TXT 10	SENSOR TYPE	TC	TC	TC
TXT 11	UNIT	°C	°C	°C
TXT 12	DECIMAL POINT	111.1	111.1	111.1
TXT 13	DISPLAY RANGE LOW	0.0	0.0	0.0
TXT 14	DISPLAY RANGE HIGH	100.0	100.0	*
TXT 15	DISPLAY	REL.UN	REL.UN	REL.UN
TXT 18	TC SENSOR TYPE	TC–B	TC–J	TC–J
TXT 36	ANA.OUT	VOLT	CURR	CURR
TXT 37	O.RANGE	0–20	4–20	4–20
TXT 38	OUT.ERR	23MA	23MA	23MA

* SET IN THE FIELD

TO ALTER THE VALUE OF R1.SETP OR R2.SETP:

1. TO CHANGE THE SETPOINT FOR RELAY 1 (R1.SETP), PRESS THE UP ARROW ONCE FROM THE MAIN SCREEN. TO CHANGE THE SETPOINT FOR RELAY 2 (R2.SETP), PRESS THE DOWN ARROW ONCE FROM THE MAIN SCREEN.
2. WHEN ON THE SETPOINT PAGE FOR THE DESIRED RELAY, USE THE UP AND DOWN KEYS TO ADJUST THE SETPOINT AND PRESS OK TO SAVE THE NEW VALUE. PRESS AND HOLD OK TO GO BACK ONE PAGE WITHOUT SAVING.

ULC1 – HYDRORANGER 200

FUNCTION NUMBER		FUNCTION DESCRIPTION	DEFAULT	FACTORY SETTING
P000		LOCK	1954	
P001		OPERATION	3	4
P002		MATERIAL	1	
P003	01	MEASUREMENT RESPONSE	2	3
	02	MEASUREMENT RESPONSE	2	3
P004	01	TRANSDUCER	0	100
	02	TRANSDUCER	0	100
P005		UNITS	1	5
P006	01	EMPTY	26.2	*
	02	EMPTY	26.2	*
P007	01	SPAN	26.2	*
	02	SPAN	26.2	*
P060	01	DECIMAL POSITION	2	
	02	DECIMAL POSITION	2	
P070		FAIL SAFE TIMER	10.0 MIN	0.5 MIN
P071	01	FAIL SAFE LEVEL	HOLD	HI
	02	FAIL SAFE LEVEL	HOLD	LO
P200	01	MA OUTPUT 1 RANGE	2	
	02	MA OUTPUT 2 RANGE	2	
P201	01	MA OUTPUT 1 FUNCTION	0	1
	02	MA OUTPUT 2 FUNCTION	0	1
P202	01	MA OUTPUT 1 ALLOCATION	1	
	02	MA OUTPUT 2 ALLOCATION	2	
P219	01	MA OUTPUT 1 FAILSAFE	OFF	HI
	02	MA OUTPUT 2 FAILSAFE	OFF	LO

NOTES:
1. FACTORY SETTING '*' NOTES PARAMETERS SET IN THE FIELD.
2. THE ABOVE IS A PARTIAL LISTING OF SETPOINTS. REFER TO THE INSTRUCTION MANUAL FOR A COMPLETE PARAMETER LISTING.

SEQUENCE OF OPERATION

SCREEN MODES OF OPERATION:

LCS–HAND: WHEN THE LCS MOUNTED HAND–OFF–REMOTE SELECTOR IS IN THE HAND POSITION, THE SCREEN WILL RUN CONTINUOUSLY. WHEN THE LCS MOUNTED HAND–OFF–REMOTE SELECTOR IS PLACED IN THE OFF POSITION, THE SCREEN WILL PARK AT HOME.

LCS–REMOTE: WHEN THE LCS MOUNTED HAND–OFF–REMOTE SELECTOR IS IN THE REMOTE POSITION, THE SCREEN WILL OPERATE BASED ON THE MAIN CONTROL PANEL OIU MOTOR FACEPLATE. IN REMOTE, THE OPERATORS MAY SELECT EITHER MANUAL, OR AUTO MODES OF OPERATION FROM THE OIU.

OIU–MANUAL: WHEN MANUAL MODE IS SELECTED FROM THE OIU MOTOR FACEPLATE, THE SCREEN WILL START TO RUN WHEN THE START PUSHBUTTON IS PRESSED. THE SCREEN WILL CONTINUE TO RUN UNTIL THE STOP PUSHBUTTON IS PRESSED. WHEN THE STOP PUSHBUTTON IS PRESSED, THE SCREEN WILL PARK AT HOME.

OIU–AUTO: WHEN AUTO MODE IS SELECTED FROM THE OIU MOTOR FACEPLATE, ALL AVAILABLE SCREENS WILL OPERATE PER A LEAD, LAG, LAG II SEQUENCE. ONCE THE LEVEL OF MATERIAL REACHES THE START SET–POINT OF THE LEVEL CONTROLLER, THE LEAD SCREEN WILL COMPLETE THE NUMBER OF CYCLES SET IN THE SCREEN AUTO STEP COUNTER, THEN DWELL FOR THE TIME SET IN THE SCREEN DWELL TIMER. IF THE LEVEL OF MATERIAL DOES NOT FALL BELOW THE START LEVEL SET–POINT BEFORE THE DWELL TIMER EXPIRES, THE LAG SCREEN WILL COMPLETE THE NUMBER OF CYCLES SET IN THE AUTO STEP COUNTER, THEN DWELL FOR THE TIME SET IN THE SCREEN DWELL TIMER. IF THE LEVEL OF MATERIAL STILL DOES NOT FALL BELOW THE START LEVEL SET–POINT BEFORE THE DWELL TIMER EXPIRES, THE LAG II SCREEN WILL COMPLETE THE NUMBER OF CYCLES SET IN THE AUTO STEP COUNTER. THIS SEQUENCE WILL CONTINUE UNTIL THE LEVEL OF MATERIAL FALLS BELOW THE START LEVEL SET–POINT. THE LEAD SCREEN WILL ALSO CYCLE ON AND OFF PER THE SETTINGS OF THE SCREEN REPEAT CYCLE TIMERS. THE DUTY OF LEAD, LAG, LAG II WILL BE RE–ASSIGNED ONCE THE LEVEL OF MATERIAL IS BELOW THE START LEVEL SET–POINT, AND THE OPERATION OF THE LEAD SCREEN IS COMPLETE. ALL AVAILABLE SCREENS WILL START TO RUN CONTINUOUSLY ONCE A HIGH LEVEL SIGNAL IS RECEIVED FROM THE LEVEL CONTROLLER OR HIGH LEVEL FLOAT SWITCH. THIS OPERATION WILL CONTINUE UNTIL THE LEVEL FALLS BELOW THE START LEVEL SET–POINT, AT WHICH TIME THE SCREENS WILL RESUME LEAD, LAG, LAG II OPERATION.

NOTES:
1. THE OPERATION STATUS OF EACH MOTOR WILL BE DISPLAYED ON THE OIU.
2. EACH TIME THE LCS SELECTOR IS TAKEN OUT OF REMOTE, THE MOTOR MUST BE PLACED IN AUTO ON THE MAIN CONTROL PANEL OIU.
3. IN ORDER FOR A SCREEN TO OPERATE IN THE LEAD, LAG, LAG II SEQUENCE, IT MUST BE IN AUTO AND NOT FAULTED. IF A SCREEN IS REMOVED FROM AUTO, OR BECOMES FAULTED, IT WILL BE REMOVED FROM THE LEAD, LAG, LAG II SEQUENCE.
4. IN THE EVENT OF A HIGH LEVEL, VIA LEVEL TRANSDUCER OR FLOAT SWITCH, THE HIGH LEVEL LIGHT WILL ENERGIZE AND THE ALARM HORN WILL SOUND.

CONVEYOR MODES OF OPERATION:

LCS–HAND: WHEN THE LCS MOUNTED HAND–OFF–REMOTE SELECTOR IS IN THE HAND POSITION, THE CONVEYOR WILL OPERATE PER THE LCS MOUNTED FOR–OFF–REV SELECTOR. THE LCS MOUNTED FOR–OFF–REV SELECTOR WILL SPRING RETURN FROM REV TO OFF.

LCS–REMOTE: WHEN THE LCS MOUNTED HAND–OFF–REMOTE SELECTOR IS IN THE REMOTE POSITION, THE CONVEYOR WILL OPERATE BASED ON THE MAIN CONTROL PANEL OIU MOTOR FACEPLATE. IN REMOTE, THE OPERATORS MAY SELECT EITHER MANUAL, OR AUTO MODES OF OPERATION FROM THE OIU.

OIU–MANUAL: WHEN MANUAL MODE IS SELECTED FROM THE OIU MOTOR FACEPLATE, THE CONVEYOR WILL START TO RUN FORWARD WHEN THE FORWARD PUSHBUTTON IS PRESSED. FORWARD OPERATION WILL CONTINUE UNTIL THE STOP PUSHBUTTON IS PRESSED. THE CONVEYOR WILL START TO RUN IN REVERSE WHEN THE REVERSE PUSHBUTTON IS PRESSED AND HELD. REVERSE OPERATION WILL CONTINUE UNTIL THE REVERSE PUSHBUTTON IS RELEASED.

OIU–AUTO: WHEN AUTO MODE IS SELECTED FROM THE OIU MOTOR FACEPLATE, THE CONVEYOR WILL START TO RUN ONCE THE COMBINED SCREEN CYCLE COUNT REACHES THE CONVEYOR START COUNT SET–POINT. ONCE THE CONVEYOR STARTS TO RUN, IT WILL RUN FOR THE TIME SET IN THE CONVEYOR RUN TIMER.

PRESS MODES OF OPERATION:

LCS–HAND: WHEN THE LCS MOUNTED HAND–OFF–REMOTE SELECTOR IS IN THE HAND POSITION, THE PRESS WILL OPERATE PER THE LCS MOUNTED FOR–OFF–REV SELECTOR. THE LCS MOUNTED FOR–OFF–REV SELECTOR WILL SPRING RETURN FROM REV TO OFF.

LCS–REMOTE: WHEN THE LCS MOUNTED HAND–OFF–REMOTE SELECTOR IS IN THE REMOTE POSITION, THE CONVEYOR WILL OPERATE BASED ON THE MAIN CONTROL PANEL OIU MOTOR FACEPLATE. IN REMOTE, THE OPERATORS MAY SELECT EITHER MANUAL, OR AUTO MODES OF OPERATION FROM THE OIU.

OIU–MANUAL: WHEN MANUAL MODE IS SELECTED FROM THE OIU MOTOR FACEPLATE, THE PRESS WILL START TO RUN FORWARD WHEN THE FORWARD PUSHBUTTON IS PRESSED. FORWARD OPERATION WILL CONTINUE UNTIL THE STOP PUSHBUTTON IS PRESSED. THE PRESS WILL START TO RUN IN REVERSE WHEN THE REVERSE PUSHBUTTON IS PRESSED AND HELD. REVERSE OPERATION WILL CONTINUE UNTIL THE REVERSE PUSHBUTTON IS RELEASED.

OIU–AUTO: WHEN AUTO MODE IS SELECTED FROM THE OIU MOTOR FACEPLATE, THE PRESS WILL OPERATE PER THE WASH CYCLE AUTO SEQUENCE DETAILED BELOW.

SEQUENCE OF OPERATION

WASH CYCLE AUTO SEQUENCE:

A PRESS WASH CYCLE WILL BE INITIATED ONCE THE TOTAL RUN TIME OF THE CONVEYOR HAS REACHED THE CONVEYOR ACCUMULATED RUN TIME SET–POINT. ONCE A WASH CYCLE IS INITIATED, THE PRESS WILL RUN FORWARD FOR THE TIME SET IN THE PRESS INITIAL RUN TIMER. ONCE THE INITIAL RUN TIMER IS COMPLETE, THE PRESS WILL RUN FORWARD FOR THE TIME SET IN THE PRESS FORWARD RUN TIMER, AND DWELL FOR THE TIME SET IN THE PRESS FOR–REV DWELL TIMER. THE PRESS WILL THEN RUN IN REVERSE FOR THE TIME SET IN THE PRESS REVERSE RUN TIMER, AND DWELL FOR THE TIME SET IN THE PRESS REV–FOR DWELL TIMER. EACH TIME THE PRESS FORWARD RUN TIMER STARTS, THE SPRAY WASH SOLENOID WILL OPEN FOR THE TIME SET IN THE SPRAY WASH RUN TIMER. THE PRESS WILL COMPLETE THE NUMBER OF FORWARD–DWELL–REVERSE–DWELL CYCLES SET IN THE PRESS WASH CYCLE COUNTER. ONCE THE PRESS HAS COMPLETED THE SET NUMBER OF CYCLES, THE PRESS WILL RUN CONTINUOUSLY FORWARD FOR THE TIME SET IN THE PRESS DISCHARGE TIMER. ONCE THE DISCHARGE TIMER REACHES ITS SET–POINT, THE DRAIN FLUSH SOLENOID VALVE WILL OPEN FOR THE TIME SET IN THE DRAIN FLUSH RUN TIMER. ONCE THE DRAIN FLUSH SOLENOID VALVE CLOSES, THE WASH CYCLE WILL BE COMPLETE.

NOTES:
1. IF THE SPRAY WASH RUN TIMER SETTING IS GREATER THAN THE COMBINED TOTAL OF THE PRESS FORWARD, REVERSE, AND DWELL TIMERS, THE SPRAY WASH SOLENOID VALVE WILL REMAIN OPEN FOR THE ENTIRE WASH CYCLE.
2. PRESSING AND HOLDING THE SYSTEM RESET PUSHBUTTON FOR 3 SECONDS WILL INITIATE A WASH CYCLE IF THE PRESS IS IN AUTO MODE.

EMERGENCY STOP:
THE SCREENS, PRESS UNITS, AND ALL SPRAY WASHES WILL STOP IMMEDIATELY, AND THE CONTROL POWER ON LIGHT WILL DE–ENERGIZE IF ANY OF THE E–STOP PUSHBUTTONS ARE PRESSED. TO RESET, ENSURE THAT ALL E–STOPS ARE ENABLED AND PRESS THE SYSTEM RESET PUSHBUTTON.

SCREEN FAULTS:
1. A FAULT OCCURS WHEN THE SCREEN POWER MONITOR IS TRIPPED.
2. A FAULT OCCURS WHEN THE SCREEN MOTOR STARTER THERMAL OVERLOAD IS TRIPPED.
3. A FAULT OCCURS WHEN THE SCREEN MOTOR THERMOSTAT IS TRIPPED.
– WHEN FAULTS 1 OR 2 OCCUR, THE SCREEN WILL STOP IMMEDIATELY AND THE SCREEN FAULT LIGHT WILL BE ENERGIZED.
– WHEN FAULT 3 OCCURS, THE SCREEN WILL STOP IMMEDIATELY.
– FAULTS 1 AND 2 CAN BE RESET BY PRESSING THE SYSTEM RESET PUSHBUTTON.
– FAULT 3 WILL AUTOMATICALLY RESET.

CONVEYOR FAULTS:
4. A FAULT OCCURS WHEN THE CONVEYOR LOAD MONITOR IS TRIPPED.
5. A FAULT OCCURS WHEN THE CONVEYOR MOTOR STARTER THERMAL OVERLOAD IS TRIPPED.
6. A FAULT OCCURS WHEN THE CONVEYOR MOTOR THERMOSTAT IS TRIPPED.
7. A FAULT OCCURS WHEN THE CONVEYOR DETECTS ZERO MOTION
– WHEN FAULTS 4, 5, OR 7 OCCUR, THE CONVEYOR WILL STOP IMMEDIATELY AND THE PRESS FAULT LIGHT WILL BE ENERGIZED.
– WHEN FAULT 6 OCCURS, THE CONVEYOR WILL STOP IMMEDIATELY.
– FAULTS 4, 5 AND 7 CAN BE RESET BY PRESSING THE SYSTEM RESET PUSHBUTTON.
– FAULT 6 WILL AUTOMATICALLY RESET.

PRESS FAULTS:
8. A FAULT OCCURS WHEN THE PRESS LOAD MONITOR IS TRIPPED.
9. A FAULT OCCURS WHEN THE PRESS MOTOR STARTER THERMAL OVERLOAD IS TRIPPED.
10. A FAULT OCCURS WHEN THE PRESS MOTOR THERMOSTAT IS TRIPPED.
– WHEN FAULTS 8 OR 9 OCCUR, THE PRESS WILL STOP IMMEDIATELY AND THE PRESS FAULT LIGHT WILL BE ENERGIZED.
– WHEN FAULT 10 OCCURS, THE PRESS WILL STOP IMMEDIATELY.
– FAULT 8 OR 9 CAN BE RESET BY PRESSING THE SYSTEM RESET PUSHBUTTON.
– FAULT 10 WILL AUTOMATICALLY RESET.

REVISION	BY	CHKD	DATE	LTR
				4
				3
				2
				1

TRIPLE ROTOSCREEN / CONVEYOR / SWP CONTROL PANEL
DESCRIPTION
5HP, 5HP, 5HP, 5HP, 5HP, 480VAC
TYPE | SIZE

DATE	STD. BY	STD.CHKD.	STD.APPVD	SCALE	DATE	PROJ. BY	PROJ.CHKD.	PROJ.APPVD
				NONE	04/11	BMG	RTH	RTH

ALL COMPONENTS MUST BE FABRICATED AND MACHINED ACCORDING TO WESTECH STANDARD SPECIFICATION (DRAWING P24Z–024A), UNLESS SPECIFICALLY NOTED ON THIS DRAWING.

This drawing is property of WESTECH ENGINEERING, INC. and is transmitted in confidence. Neither receipt nor possession confers or transfers any rights to reproduce, use, or disclose, in whole or in part, data contained herein for any purpose, without the written permission of WESTECH ENGINEERING, INC., Salt Lake City, Utah

WESTECH | DRAWING NUMBER: E1OD | PROJECT NUMBER: 21258ABC | REV. 0

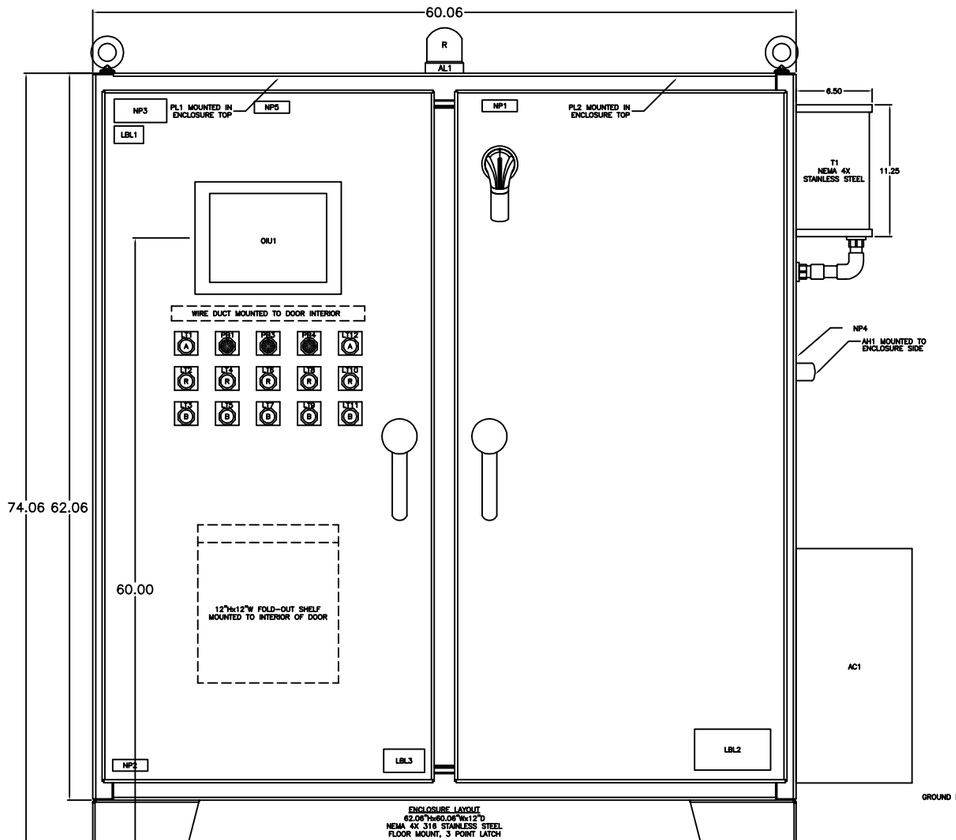

ENCLOSURE LAYOUT
62.06"Hx60.06"Wx12"D
NEMA 4X 316 STAINLESS STEEL
FLOOR MOUNT, 3 POINT LATCH

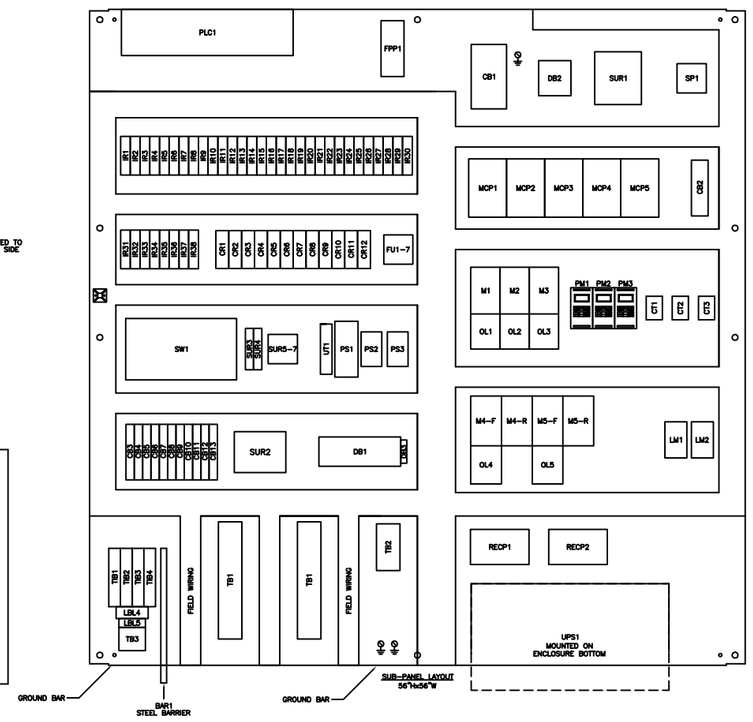

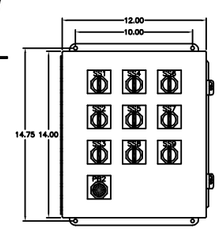

ENCLOSURE LAYOUT
14"Hx12"Wx5"D
NEMA 4X, 316 STAINLESS STEEL, CLASS 1, DIV 2

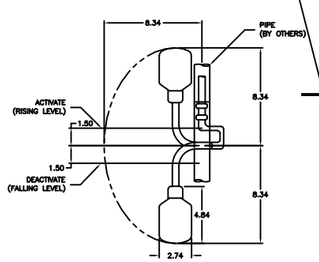

FLOAT SWITCH AND PIPE MOUNT CLAMP
POLYPROPYLENE CASING
N.O. MERCURY-FREE SWITCH
W/20' WATER RESISTANT CPE JACKET TYPE SJOW CABLE

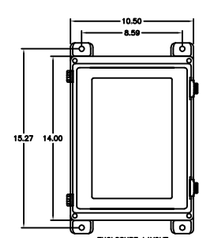

ENCLOSURE LAYOUT
14"Hx12.5"Wx7"D
NEMA 4X FIBERGLASS
10.28"Hx6.84"W WINDOW

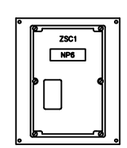

SUB-PANEL LAYOUT
10.75"Hx8.88"W

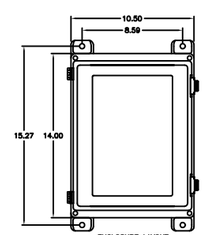

ENCLOSURE LAYOUT
14"Hx10.5"Wx7"D
NEMA 4X FIBERGLASS
10.28"Hx6.84"W WINDOW

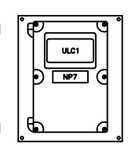

SUB-PANEL LAYOUT
10.75"Hx8.88"W

ENGRAVED PILOT DEVICE LEGEND PLATES:

LT1 – CONTROL POWER ON
LT2 – SCREEN NO.1 RUNNING
LT3 – SCREEN NO.1 FAULT
LT4 – SCREEN NO.2 RUNNING
LT5 – SCREEN NO.2 FAULT
LT6 – SCREEN NO.3 RUNNING
LT7 – SCREEN NO.3 FAULT
LT8 – CONVEYOR RUNNING
LT9 – CONVEYOR FAULT
LT10– PRESS RUNNING
LT11– PRESS FAULT
PB1 – EMERGENCY STOP
PB2 – EMERGENCY STOP
PB3 – SYSTEM RESET
PB4 – ALARM SILENCE
SS1 – SCREEN NO.1 HAND–OFF–REMOTE
SS2 – SCREEN NO.2 HAND–OFF–REMOTE
SS3 – SCREEN NO.3 HAND–OFF–REMOTE
SS4 – CONVEYOR HAND–OFF–REMOTE
SS5 – CONVEYOR FOR–OFF–REV
SS6 – PRESS HAND–OFF–REMOTE
SS7 – PRESS FOR–OFF–REV
SS8 – SPRAY WASH HAND–OFF–REMOTE
SS9 – DRAIN FLUSH HAND–OFF–REMOTE

ENGRAVED NAMEPLATES:

NP1 – 480VAC–3PH–60HZ
NP2 – INTRINSICALLY SAFE CIRCUITS
NP3 – CONTROL PANEL PROVIDES INTRINSICALLY SAFE CIRCUIT EXTENSIONS FOR USE IN CLASS I, GROUPS A, B, C, D; CLASS II, GROUPS E, F, G; CLASS III HAZARDOUS LOCATIONS WHEN CONNECTED PER PEPPERL & FUCHS INSTALLATION DRAWING NO. 116–0145
NP4 – ALARM HORN
NP5 – LCP–102
LCP–103
NP6 – ZERO MOTION SENSOR
NP7 – ULTRASONIC LEVEL CONTROLLER

LABEL DESCRIPTION:

LBL1 – WARNING: MULTIPLE SUPPLY SOURCES OPEN ALL DISCONNECTS BEFORE SERVICING EQUIPMENT OR OTHER UNIT WIRING.
LBL2 – DANGER HIGH VOLTAGE ENTRY BY QUALIFIED PERSON ONLY
LBL3 – ELEMECH ELECTRICAL CONTROL SYSTEMS
LBL4 – WARNING SUBSTITUTION OF COMPONENTS MAY IMPAIR INTRINSIC SAFETY
LBL5 – INTRINSICALLY SAFE FIELD WIRING TERMINALS

REVISION	BY	CHKD	DATE	LTR
				A
				A
				B
				A

TRIPLE ROTOSCREEN / CONVEYOR / SWP CONTROL PANEL

DESCRIPTION: 5HP, 5HP, 5HP, 5HP, 5HP, 480VAC

TYPE				SIZE				
				NONE	04/11	BMG	RTH	RTH
DATE	STD. BY	STD.CHKD.	STD.APPVD	SCALE	DATE	PROJ. BY	PROJ.CHKD.	PROJ.APPVD

ALL COMPONENTS MUST BE FABRICATED AND MACHINED ACCORDING TO WESTECH STANDARD SPECIFICATION (DRAWING P24Z–024A), UNLESS SPECIFICALLY NOTED ON THIS DRAWING.

This drawing is property of WESTECH ENGINEERING, INC. and is transmitted in confidence. Neither receipt nor possession confers or transfers any rights to reproduce, use, or disclose, in whole or in part, data contained herein for any purpose, without the written permission of WESTECH ENGINEERING, INC., Salt Lake City, Utah

WESTECH

DRAWING NUMBER	PROJECT NUMBER	REV.
E1OD	21258ABC	0

Westech Engineering Inc.
Dual Rotoscreen / Conveyor / SWP Control Panel
Dos Rios WRC, San Antonio, TX

Item No	Component	Description	Manufacturer Part Number	QTY	Device	
Dual Rotoscreen / Conveyor / SWP Control Panel (Quantity: 2)						
1	00-000-000	Wire, Hardware, Wire labels, etc.	EleMech: Miscellaneous	6		
2	10-069-000	Wireway Duct Cover, 1.5"W, 6 Ft. Section, w/Panduit F Series	Panduit: C1.5WH6	6		
3	10-069-002	Wireway Duct Cover, 2"W, 6 Ft. Section, w/Panduit F Series	Panduit: C2WH6	6		
4	10-069-005	Wireway Duct, 1.5"Wx3"H, 6 Foot Section	Panduit: F1.5X3WH6	6		
5	10-069-008	Wireway Duct, 2"Wx3"H, 6 Foot Section	Panduit: F2X3WH6	6		
6	25-000-A001	Legendplate Assembly, Yellow E-Stop, Standard Encl.	EleMech: 25-000-A001 Assembly	1		
7	25-000-A002	Legendplate Assembly, White, Black Text, Standard Encl.	EleMech: 25-000-A002 Assembly	12		
8	25-000-A019	Nameplate Assembly, White: Power Supply - 3/60/480VAC	EleMech: 25-000-A019 Assembly	1		
9	25-050-001	Nameplate/Legendplate, Custom Engraving	PJD: CUSTOM	10		
10	42-063-007	Terminal Block, Din Rail, 35MM Wide, 15 High, 2 Meters Long	Wieland: 98.370.1000	2		
11	52-069-002	Heat Shrink tube, 4' strip, (64 labels) Clear	Panduit: HSTT19-48-QC(clear)	15		
12	68-035-007	Air Cond, NEMA 4X, 2000 BTU, 115VAC, 7 Amps, w/500W Heater	Hoffman: T200216G157	1	AC1	
13	01-005-005	Alarm Horn, Panel Mount, 120VAC, 45mm front, 22.5mm, NEMA 4X	Allen Bradley: 855P-B10ME22	1	AH1	
14	53-017-000	Conduit, Hub, 3/4", Zinc, NEMA 4X, Std.	Appleton: HUB-75D	1	AL1	
15	56-021-013	Beacon, Strobe, Halogen, NEMA 4X, 0.25A@120VAC, Red	Edwards: 125HALFR120A	1	AL1	
16	18-000-002	Steel Barrier, 14 Ga., White Finish, 0.5"Wx10.0"x6.0"D	EleMech: 18-000-002	1	BAR1	
17	03-018-073	Circuit Breaker, 3 Pole, 480VAC, 40A, 65K AIC, E125	Cutler-Hammer: EGH3040FFG	1	CB1	
18	03-018-108	Circuit Breaker Aux. Contact, E125-Frame, 1NO/NC, 6A	Cutler-Hammer: AUX1A1BPK	1	CB1	
19	03-018-A004	Circuit Breaker Disconnect Kit, NEMA 4X, E-Frame, 12" Shaft	Cutler-Hammer: EGHMVD12RX Assem	1	CB1	
20	03-056-024	Circuit Breaker, 1 Pole, 240VAC, 2A, 14kA, UL489, Type C	Siemens: 5SJ4102-7HG40	2	CB12,13	
21	03-056-054	Circuit Breaker, 2 Pole, 480VAC, 16A, 10kA, UL489, Type D	Siemens: 5SJ4216-8HG42	1	CB2	
22	03-056-038	Circuit Breaker, 1 Pole, 240VAC, 13A, 14kA, UL489, Type C	Siemens: 5SJ4113-7HG40	2	CB3,7	
23	03-056-032	Circuit Breaker, 1 Pole, 240VAC, 20A, 14kA, UL489, Type C	Siemens: 5SJ4120-7HG40	1	CB4	
24	03-056-031	Circuit Breaker, 1 Pole, 240VAC, 15A, 14kA, UL489, Type C	Siemens: 5SJ4118-7HG40	1	CB5	
25	03-056-026	Circuit Breaker, 1 Pole, 240VAC, 4A, 14kA, UL489, Type C	Siemens: 5SJ4104-7HG40	1	CB6	
26	03-056-025	Circuit Breaker, 1 Pole, 240VAC, 3A, 14kA, UL489, Type C	Siemens: 5SJ4103-7HG40	1	CB8	
27	03-056-022	Circuit Breaker, 1 Pole, 240VAC, 1A, 14kA, UL489, Type C	Siemens: 5SJ4101-7HG40	3	CB9-11	
28	57-279-003	Cable, Comm., Fiber Optic, LC to SC, Duplex Patch, 3 M	Black Box: EFN110-003M-SCLC	1	CBL11	
29	57-009-006	Cable, Signal, Shielded, 2 Conductor, 18AWG, Per Foot	Belden: 8760	20	CBL1-5	
30	57-000-002	Cable, Comm., Ethernet, Standard, RJ45M - RJ45M, Blue, 7'	Deep Surplus: CB242-7BL	5	CBL6-10	
31	06-058-011	Control Relay, 3PDT,120VAC, 11Pin Spade, Indicator, Operator	Square D: RXM3AB2F7	10	CR1-10	
32	06-058-012	Control Relay, Bus Jumper, 2-Pole, w/Telemec. RXM Relay	Square D: RXZ S2	9	CR1-10	
33	38-058-003	Socket, 11 Pin Spade, Din, Screw Term., 3Tier, 250V w/3-Pole	Square D: RXZE2S111M	10	CR1-10	
34	34-024-000	PM, Current Xfmr, 1PH, 0.4-10A, Din Rail, CTM10, w/EL-FI	Emotron: 01-2471-10	2	CT1-2	
35	07-063-000	Distribution Block, End Cover, 4 Pole, 300V,10A, w/WK4E\V\VB	Wieland: 07.311.4053.1	2	DB1	

Item No	Component	Description	Manufacturer Part Number	QTY	Device	
36	07-063-001	Distribution Block, Jumper, 4 Pole, 300V,10A, w/WK4E\V\VB	Wieland: Z7.210.3427	5	DB1	
37	07-063-002	Distribution Block, Single Pole, 10A, 300V, WK4E\V\VB	Wieland: 57.404.6955.1	24	DB1	
38	42-063-004	Terminal Block, Ground, 30A, 600V, 6MM Wide, w/WK4/U	Wieland: 57.504.9053.0	8	DB1,TB1	
39	07-030-009	Distribution Block, Cover,Single Pole, 175-460A,Poly/Medium	Ferraz-Shawmut: 08570	3	DB2	
40	07-030-012	Distribution Block, Adder Pole, 175A, 2-14AWG, 1 In, 8 Out	Ferraz-Shawmut: 67580	2	DB2	
41	07-030-013	Distribution Block, Single Pole, 175A, 2-14AWG, 1 In, 8 Out	Ferraz-Shawmut: 67581	1	DB2	
42	11-035-243	Sub-Panel, Painted Steel, w/60"Hx60"W 2-Door Enc.	Hoffman: A-60P60	1	EN1	
43	11-035-588	Enclosure, Nema 4X, 316SS, 62"Hx60"Wx12"D, 3PT, Free Standin	Hoffman: A-62H6012SS6LP3PT	1	EN1	
44	11-035-666	Enclosure Shelf, Folding, Stainless, 12"x12"	Hoffman: ACSHELF1212SS	1	EN1	
45	33-279-003	Fiber Patch Box, Locking, up to 4 Adapter Panels,Surface Mnt	Black Box: JPM402A-R2	1	FPP1	
46	33-279-004	Fiber Patch Box Adapter Panels, 3 Duplex SC Pairs	Black Box: JPM405A-R2	2	FPP1	
47	13-030-081	Fuse, Glass, Fast Acting, 250VAC, 3 Amp	Ferraz-Shawmut: GGC-3	2	FU1,2	
48	42-063-026	Terminal Block, Fused, Single Pole, 15A, 600V, 10MM, WK	Wieland: 57.904.6355.0	7	FU1-7	
49	13-030-147	Fuse, Glass, Fast Acting, 250VAC, 1/2 Amp	Ferraz-Shawmut: GGC-1/2	3	FU3-5	
50	13-030-088	Fuse, Glass, Time Delay, 250VAC, 2 Amp	Ferraz-Shawmut: GGA-2	2	FU6,7	
51	15-011-000	Ground Lug	Blackburn: L70	3	GND	
52	15-058-001	Ground Bar, 9 Gage, 18-8AWG	Square D: PK9GTA	2	GND	
53	06-058-024	Control Relay, SPDT,120VAC, 5Pin Spade, Operator, 15A	Square D: RPM12F7	34	IR1-34	
54	38-058-009	Socket, 5 Pin Spade, Din Mount, Screw Term., w/ RPM 1-Pole	Square D: RPZF1	34	IR1-34	
55	52-137-002	Label, Multiple Supply Sources, Warning, 2.5"Wx1.5"H, Yellow	Nameplate Tech: 52-137-002	1	LBL1	
56	52-137-000	Label, High Voltage, Danger, 2.25"Wx4.0"H, White/Black/Red	Nameplate Tech: 52-137-000	1	LBL2	
57	34-001-002	PM, 1/3PH, 110-500VAC, 0.5-5A, 2)SPDT, 120VAC	ABB: 1SVR 450 330 R0000	2	LM1,2	
58	32-005-038	Pilot light, PTT, NEMA 4X, 120VAC/DC, LED, Amber	Allen-Bradley: 800H-QRTH10A	1	LT1	
59	32-005-126	Pilot light, PTT, Nema 4X, 120VAC/DC, LED, Blue	Allen-Bradley: 800H-QRTH10B	4	LT-B	
60	32-005-040	Pilot Light, PTT, NEMA 4X, 120VAC/DC, LED, Red	Allen-Bradley: 800H-QRTH10R	4	LT-R	
61	22-018-000	Motor Starter, Non-Rev., NEMA 0, 1 NO Aux, 120VAC Coil, w/OL	Cutler-Hammer: AN16BNOAC	2	M1-2	
62	22-018-007	Aux. Contact, Top mounted, 3NO/1NC, w/C-H Freedom	Cutler-Hammer: C320KGT14	6	M1-4	
63	22-018-002	Motor Starter, Reversing, NEMA 0, 120VAC Coil, w/OL	Cutler-Hammer: AN56BNOAC	2	M3,4-F/R	
64	21-018-009	Motor Circuit Prot, 3 Pole, 480VAC, 15A, 5.7-12.6 FLA, GMCP	Cutler-Hammer: GMCP015E0C	4	MCP1-4	
65	21-018-014	Motor Circuit Prot, Close Coupled Handle Mech. Lockout/GMCP	Cutler-Hammer: HRGMC10	4	MCP1-4	
66	25-000-A010	Nameplate Assembly, White, Black Text, 1"Hx3"W	EleMech: 25-000-A010 Assembly	4	NP1,2,4,5	
67	25-000-A013	Nameplate Assembly, Yellow: Intrinsically Safe Circuits P&F	EleMech: 25-000-A013 Assembly	1	NP3	
68	26-044-008	OIU, Magelis, 12", NEMA 4X Indoor, 24VDC, Touch, Ethernet	Modicon: XBTGT6330	1	OIU1	
69	WES-246-P004	Program, OIU, Magelis XBT GT, Standard	EleMech: WES-246-P004	1	OIU1	
70	28-018-008	Overload Relay Heater Pack, 3PH, 4.55-7.40A, w/Freedom, C20	Cutler-Hammer: H2009B-3	1	OL1-4	
71	29-005-010	Pushbutton E-Stop, NEMA 4X, Oper+1NCLB, Twist Rel. Red Head	Allen-Bradley: 800H-FRXT6D4	1	PB1	

Item No	Component	Description	Manufacturer Part Number	QTY	Device	
72	02-005-000	Contact Block, 1NO/1NC, w/A-B 800 Series	Allen-Bradley: 800T-XA	1	PB3	
73	29-005-047	Pushbutton, Nema 4X, 1NO+1NC, Extended Head, Black	Allen-Bradley: 800H-BR2A	2	PB3,4	
74	54-035-000	Panel Light, Flourescant, 0.35A, 115VAC, Off-On Swi, Recep.	Hoffman: ALF16M12R	2	PL1,2	
75	33-044-127	M340, Discrete Input Module, 16 In, 120VAC	Modicon: BMXDAI1604	3	PLC1	
76	33-044-129	M340, Analog Input Module, 4 Channel	Modicon: BMXAMI0410	1	PLC1	
77	33-044-133	M340, Power Supply Module 115/240VAC, 36W	Modicon: BMXCPS3500	1	PLC1	
78	33-044-136	M340, Rack, 8 Slot	Modicon: BMXXBP0800	1	PLC1	
79	33-044-138	M340, Processor, BMX, (1) Serial, (1) USB, (1) Ethernet, 4MB	Modicon: BMXP342020	1	PLC1	
80	33-044-140	M340, Electrostatic Shield Kit, 8-Slot, w/XBP0800	Modicon: BMXXSP0800	1	PLC1	
81	33-044-141	M340, Screw Terminal Block, 20 Point	Modicon: BMXFTB2000	6	PLC1	
82	33-044-146	M340, Protective Cover, Empty Slot, 5 Covers per Kit	Modicon: BMXXEM010	1	PLC1	
83	33-044-147	M340, Discrete Output Module, 16 Out, 100/240VAC - Relay	Modicon: BMXDRA1605	1	PLC1	
84	33-044-163	M340, Electrostatic Shield Terminal, Set of 10	Modicon: STBXSP3010	1	PLC1	
85	WES-246-P005	Program, PLC, Modicon M340, Standard	EleMech: WES-246-P005	1	PLC1	
86	34-024-009	PM, EL-FI M20 3PH, 380-500VAC, 2)SPST Out, 4/20mA Out	Emotron: 01-2520-40	2	PM1-2	
87	37-202-002	Power Supply, 120W, 85-264VAC 2.2 Input, 24VDC 5A Out	Sola/Hevi-Duty: SDN 5-24-100P	1	PS1	
88	37-159-000	Power Supply, 30W, 100-240VAC 0.35A Input, 24VDC 1.3A Out	Hirschmann: RPS30	2	PS2,3	
89	14-071-A000	Receptacle Assembly, 6mA GFCI Trip, 15 Amps, 125VAC	Leviton: 6599-I Assembly	1	RECP1	
90	14-037-A000	Receptacle Assembly, Single, 15 Amps, 125VAC	Hubbell: 5261-I Assembly	1	RECP2	
91	13-000-A000	Spare Parts Box Assembly, Din Rail Mount	EleMech: 13-000-A000 Assembly	1	SP1	
92	40-058-A000	Surge Suppressor Assembly, 650VAC Max., 3 Phase, w/Ground	Square D: SDSA3650 Assembly	1	SUR1	
93	40-098-009	Surge Suppressor, 120VAC, 20A, 10kA, w/Filter, Din Mtd.	Phoenix: 28 56 70 2	1	SUR2	
94	40-098-015	Surge Suppressor, (1)4-20mA, PlugTrab 1X2-24DC-ST, w/o Base	Phoenix: 28 56 03 2	2	SUR3,4	
95	40-098-016	Surge Suppressor, Socket, PlugTrab 1X2-BE, Use w/1X2-24DC-ST	Phoenix: 28 56 03 2	2	SUR3,4	
96	40-098-014	Surge Suppressor, RJ45 Female In-Out, DATATRAB, Rail Kit	Phoenix: 28 59 08 4	3	SUR5-7	
97	33-159-009	Media Module, MICE switches, 10/100 Base	Hirschmann: MM2-4TX1(943-722-101	1	SW1	
98	33-159-010	PLC 8 Port Managed Fast Ethernet Modular Switch, DIN, 24VDC	Hirschmann: MS30-1602SAAEHH04.0	1	SW1	
99	33-159-012	Media Module, MICE switches, 4-Gigabit Ports	Hirschmann: MM4-2TX-SFP	1	SW1	
100	33-159-013	Media Transceiver, MICE switches, LC Fiber Connector, w/SFP	Hirschmann: M-SFP-SX/LC	1	SW1	
101	41-194-A003	Transformer Assembly, 480/240-120VAC, 3 KVA, Nema 4XSS	Rex: SC3LKEP4X Assembly	1	T1	
102	42-063-000	Terminal Block, Labels, Custom Printed, w/WK4/U	Wieland: 04.242.6353-CUSTOM	232	TB,DB	
103	42-063-009	Terminal Block, End Clamp, w/WKN10/U	Wieland: Z5.522.8553	11	TB,DB	
104	42-063-008	Terminal Block, Labels, Blank, w/WK4/U	Wieland: Z4.242.6353	22	TB1	
105	42-063-015	Terminal Block, Jumper, w/WK4/U, 02 pole, Insulated	Wieland: Z7.281.1227	4	TB1	
106	42-063-001	Terminal Block, End Plate, Beige, w/WK4/U	Wieland: 07.311.0555.0	4	TB1-3,DB3	
107	42-063-003	Terminal Block, Single Pole, 30A, 600V, 6MM Wide, WK4/U	Wieland: 57.504.0055.0	101	TB1-3,DB3	

Item No	Component	Description	Manufacturer Part Number	QTY	Device	
108	44-189-000	Thermocouple, Type J, 304 Stainless, 2-Wire	Grainger: 5ZY15	1	TC1	
109	18-049-000	Transformer Isolated Barrier, Single Channel, 120VAC	P&F: KFA5-SR2/EX1.W	3	TIB1-3	
110	52-000-003	Label, Underwriters Laboratories 698A, w/Decal Set	EleMech: 698A	1	UL	
111	48-105-016	UPS, Powerware 9130 Series, 120VAC, 1500VA, 1350 Watts	Powerware: PW9130L-1500T-XL	1	UPS1	
112	51-000-040	Cord, Extension, 9'-10", 15A, 14 Ga., 3 Wire, Male Plug Only	McMaster-Carr: 70355K84	1	UPS1	
113	08-247-A001	Universal Transmitter, 2.3k VAC isolation, 2 Relays, Display	PR Electronics: 4116 Assembly	1	UT1	
LCS, 9 Hole, Nema 4X, E-Stop, 6) H-O-R, 2) F-O-R, C1-D2 (Quantity: 2)						
114	25-000-A001	Legendplate Assembly, Yellow E-Stop, Standard Encl.	EleMech: 25-000-A001 Assembly	1		
115	25-000-A002	Legendplate Assembly, White, Black Text, Standard Encl.	EleMech: 25-000-A002 Assembly	9		
116	11-035-280	Enclosure, Nema 4X, 316SS, 14"Hx12"Wx6"D, Junction Box	Hoffman: A-1412CHNFSS6	1	LCS3,4	
117	02-005-009	Contact Block Sealed, Stackable, 1NC, w/A-B 800 Series	Allen-Bradley: 800T-XD2Y	1	PB2	
118	29-005-043	Pushbutton E-Stop, Nema 4X, No Contacts, Twist Rel. Red Head	Allen-Bradley: 800H-FRXT6	1	PB2	
119	02-005-008	Contact Block Sealed, Stackable, 1NC - 1NO, w/A-B 800 Series	Allen-Bradley: 800T-XAY	8	SS	
120	39-005-018	Selector Switch, Nema 4X, 3 Pos. Maintained, No Contacts	Allen-Bradley: 800H-JR2	6	SS-M	
121	39-005-047	Selector Switch, Nema 4X, 3 Pos. Spring Fr. Rt., No Contact	Allen-Bradley: 800H-JR5	2	SS-SF	
ULC, Hydroranger200, NEMA 4X FRP, Enclosure w/Win, Non-Haz (Quantity: 2)						
122	11-035-126	Sub-Panel, Painted Steel, w/12"Hx10"W Junction Box	Hoffman: A-12P10	1	EN	
123	11-035-176	Enclosure Mounting Feet, Fiberglass, J box	Hoffman: A-50MFKR	1	EN	
124	11-035-273	Enclosure, Nema 4X, Fiberglass, 13.53"Hx10"Wx7"D, w/Window	Hoffman: A-14107JFGQRPWR	1	EN	
125	25-000-A023	Nameplate Assembly, White: Ultrasonic Level Controller	EleMech: 25-000-A023 Assembly	1	NPL	
126	49-043-024	ULC, Hydro 200, 120VAC, 4-SPST, 2-SPDT, 4-20mA, Non-Haz	Milltronics: 7ML50341AA01	1	ULC	
Zero Motion Assembly, Milltronics MFA-4P, Nema 4X FRP (Quantity: 2)						
127	11-035-126	Sub-Panel, Painted Steel, w/12"Hx10"W Junction Box	Hoffman: A-12P10	1	EN	
128	11-035-176	Enclosure Mounting Feet, Fiberglass, J box	Hoffman: A-50MFKR	1	EN	
129	11-035-273	Enclosure, Nema 4X, Fiberglass, 13.53"Hx10"Wx7"D, w/Window	Hoffman: A-14107JFGQRPWR	1	EN	
130	25-000-A010	Nameplate Assembly, White, Black Text, 1"Hx3"W	EleMech: 25-000-A010 Assembly	1	NP	
131	65-043-001	Zero Motion Sensor, 120VAC, 2-SPDT Relays, 4X, Probe Req'd	Milltronics: MFA-4P	1	ZSC	
Spare Parts / Ship Loose (Total Quantity Provided)						
132	65-043-002	Zero Motion Sensor, Probe, Class 1, Div 1, 10M CBL w/ MFA-4P	Milltronics: XPP-5	2	ZSC	
133	49-043-027	ULC, Hydroranger 200 Hand Held Programmer	Milltronics: 7ML1830-2AM	2	ULC	
134	49-043-008	ULS, STH, 2"NPT, 10M Cable, FM Class 1 Div. 1	Milltronics: 7ML1100-0BA20	4	ULC	
135	12-356-003	Float Switch, Mech., Mercury-Free, N.O., 20' Cable,w/ TIB	APG: FT-300A	2	FLS	
136	11-035-345	Corrosion Inhibitor, Foam Type, Protects 10 Cubic Feet	Hoffman: A-HCI10E	4	EN	

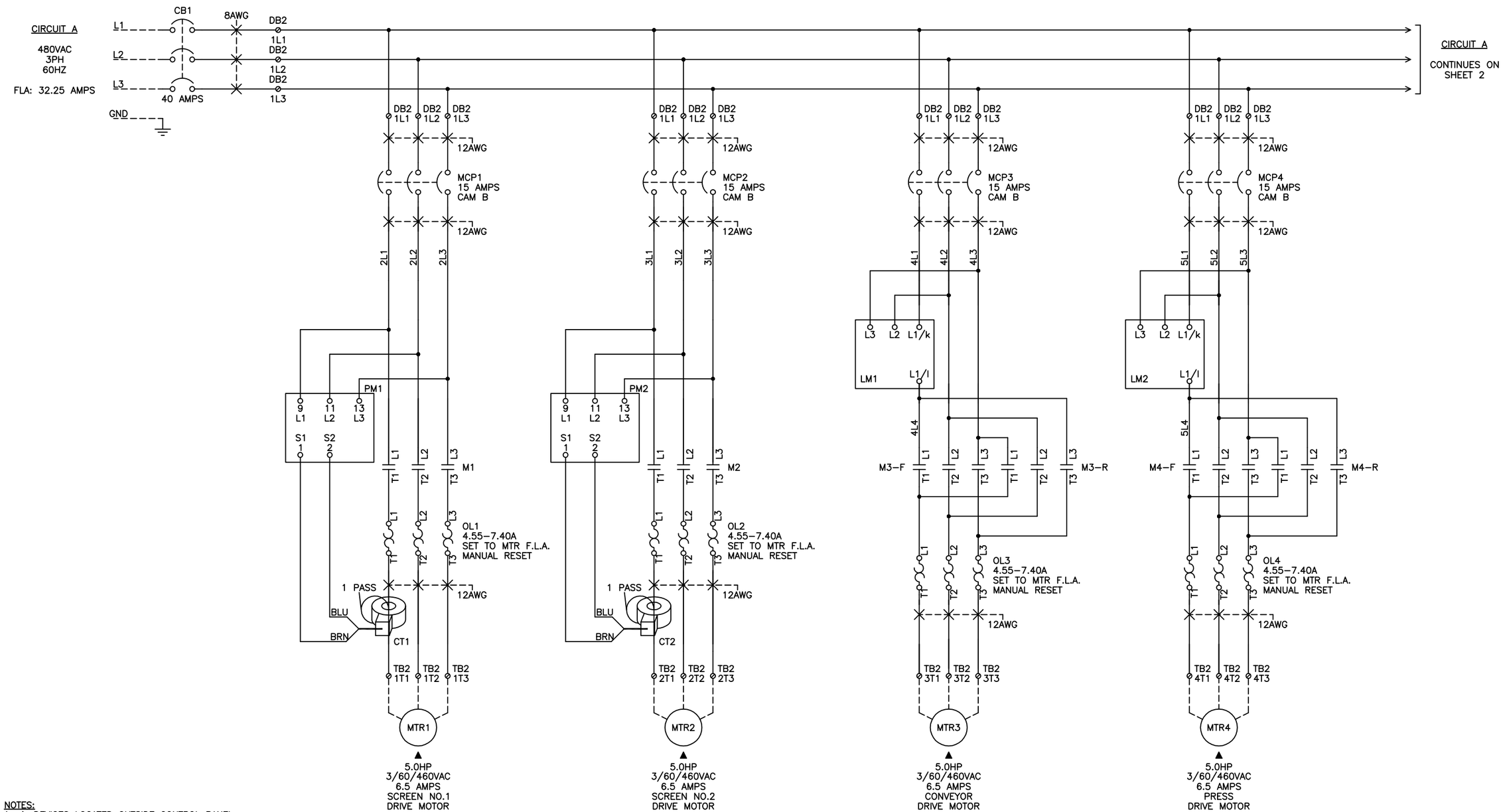

NOTES:
1. ▲ DEVICES LOCATED OUTSIDE CONTROL PANEL.
2. ▼ DEVICES LOCATED IN LOCAL CONTROL STATIONS.
3. ⊘ TERMINAL BLOCK (TB) OR DISTRIBUTION BLOCK (DB) LOCATED IN CONTROL PANEL.
4. – – FIELD WIRING.
5. NAMEPLATES SHALL BE WHITE WITH BLACK LETTERS.
6. NAMEPLATES SHALL BE ENGRAVED.
7. ELEMECH RESERVES THE RIGHT TO CHANGE, AS NECESSARY, THE SPACING, ORIENTATION, AND PHYSICAL LOCATION OF DEVICES IN ORDER TO OPTIMIZE THE DESIGN.
8. LOCAL MOTOR DISCONNECT SWITCHES SHALL BE PROVIDED BY OTHERS IF REQUIRED BY LOCAL REGULATIONS.
9. JUNCTION BOXES ARE NOT SHOWN AND SHALL BE PROVIDED BY OTHERS AS NECESSARY.
10. WIRE MARKERS SHALL BE HEAT SHRINK TYPE.
11. DRAWINGS TYPICAL FOR (2) CONTROL PANELS.

WIRE COLORS:
BLK – POWER
BLK – 120VAC HOT
WHT – 120VAC NEUTRAL
RED – 120VAC CONTROL
YEL – REMOTE
GRN – GROUND
BLU – DC POSITIVE/CONTROL
GRY – DC NEUTRAL

REVISION	BY	CHKD	DATE	LTR
				3
				2
				1
				0

DUAL ROTOSCREEN / CONVEYOR / SWP CONTROL PANEL
DESCRIPTION
5HP, 5HP, 5HP, 5HP, 5HP, 480VAC
TYPE | SIZE

DATE	STD. BY	STD.CHKD.	STD.APPVD	SCALE	DATE	PROJ. BY	PROJ.CHKD.	PROJ.APPVD
				NONE	04/11	BMG	RTH	RTH

ALL COMPONENTS MUST BE FABRICATED AND MACHINED ACCORDING TO WESTECH STANDARD SPECIFICATION (DRAWING P24Z-024A), UNLESS SPECIFICALLY NOTED ON THIS DRAWING.

This drawing is property of WESTECH ENGINEERING, INC. and is transmitted in confidence. Neither receipt nor possession confers or transfers any rights to reproduce, use, or disclose, in whole or in part, data contained herein for any purpose, without the written permission of WESTECH ENGINEERING, INC., Salt Lake City, Utah

WESTECH

DRAWING NUMBER	PROJECT NUMBER	REV.
E20D	21258ABC	0

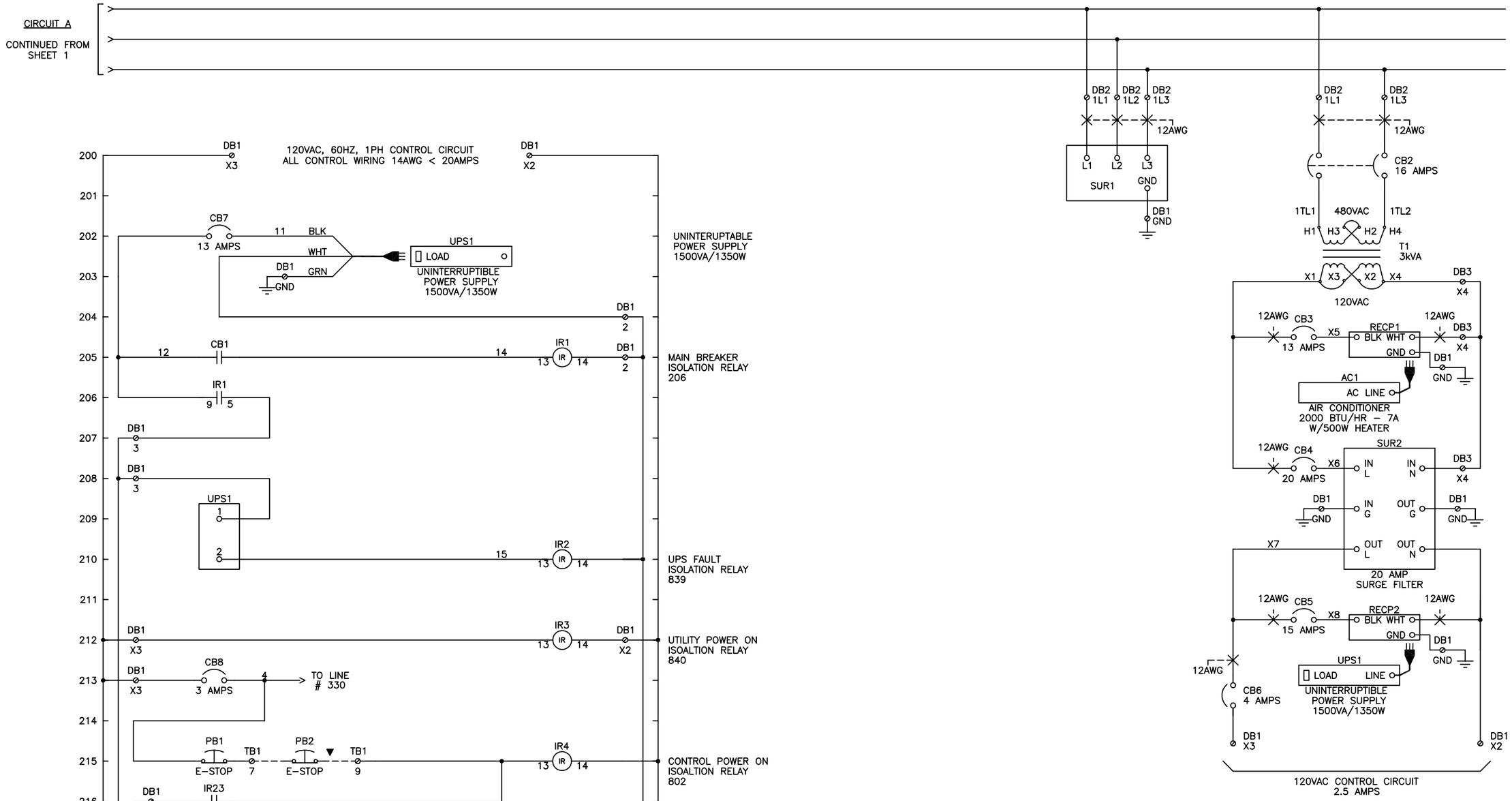

DUAL ROTOSCREEN / CONVEYOR / SWP CONTROL PANEL					
DESCRIPTION					
5HP, 5HP, 5HP, 5HP, 5HP, 480VAC					
TYPE			SIZE		
			NONE	04/11	BMG	RTH	RTH
DATE	STD. BY	STD.CHKD.	STD.APPVD	SCALE	DATE	PROJ. BY	PROJ.CHKD.	PROJ.APPVD

ALL COMPONENTS MUST BE FABRICATED AND MACHINED ACCORDING TO WESTECH STANDARD SPECIFICATION (DRAWING P24Z-024A), UNLESS SPECIFICALLY NOTED ON THIS DRAWING.

This drawing is property of WESTECH ENGINEERING, INC. and is transmitted in confidence. Neither receipt nor possession confers or transfers any rights to reproduce, use, or disclose, in whole or in part, data contained herein for any purpose, without the written permission of WESTECH ENGINEERING, INC., Salt Lake City, Utah

REVISION	BY	CHKD	DATE	LTR
				0

WESTECH

DRAWING NUMBER	PROJECT NUMBER	REV.
E20D	21258ABC	0

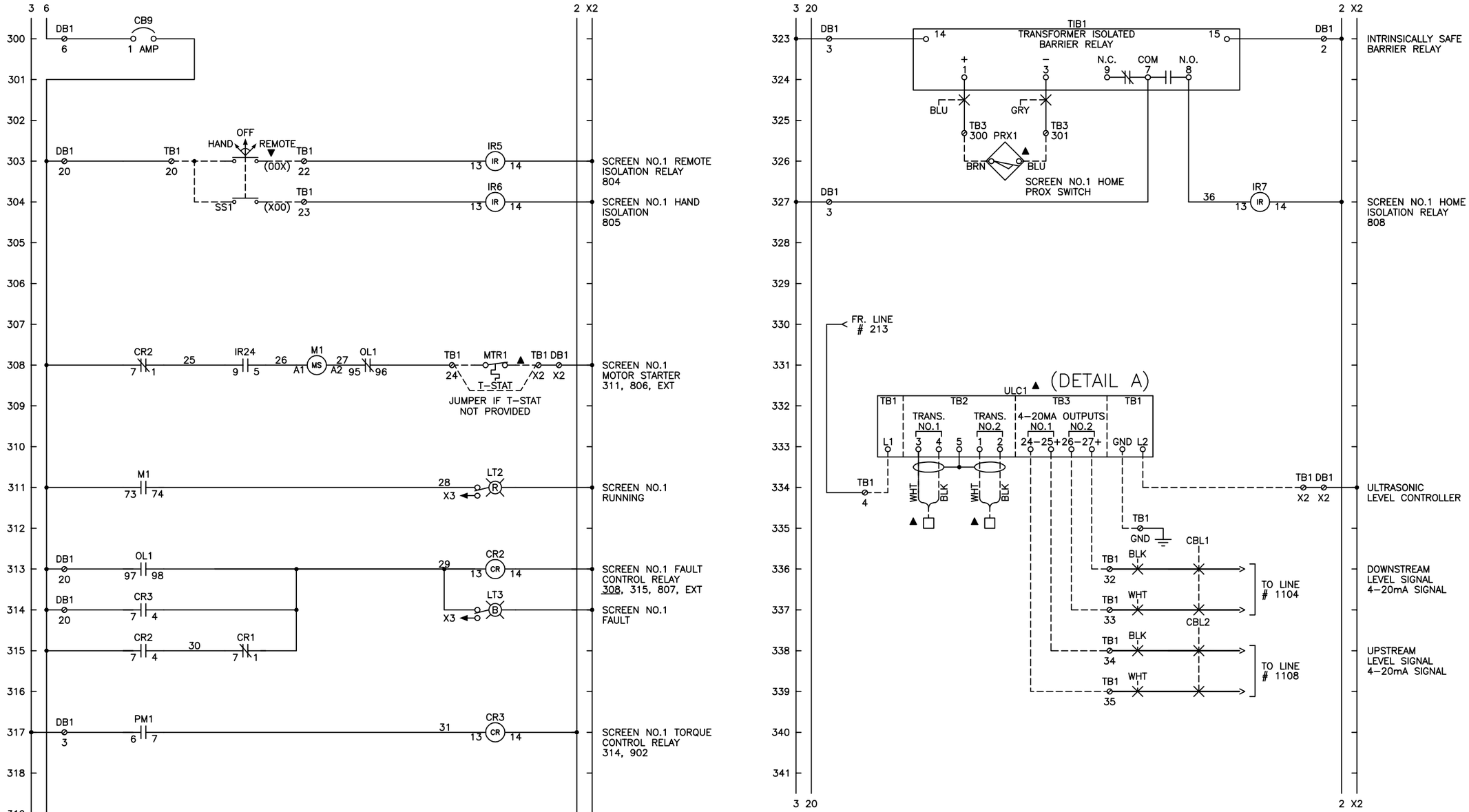

REVISION	BY	CHKD	DATE	LTR
				4
				3
				2
				1

DUAL ROTOSCREEN / CONVEYOR / SWP CONTROL PANEL

DESCRIPTION

5HP, 5HP, 5HP, 5HP, 5HP, 480VAC

TYPE

SIZE

DATE	STD. BY	STD.CHKD.	STD.APPVD	SCALE	DATE	PROJ. BY	PROJ.CHKD.	PROJ.APPVD
				NONE	04/11	BMG	RTH	RTH

ALL COMPONENTS MUST BE FABRICATED AND MACHINED ACCORDING TO WESTECH STANDARD SPECIFICATION (DRAWING P24Z-024A), UNLESS SPECIFICALLY NOTED ON THIS DRAWING.

This drawing is property of WESTECH ENGINEERING, INC. and is transmitted in confidence. Neither receipt nor possession confers or transfers any rights to reproduce, use, or disclose, in whole or in part, data contained herein for any purpose, without the written permission of WESTECH ENGINEERING, INC., Salt Lake City, Utah

WESTECH

DRAWING NUMBER	PROJECT NUMBER	REV.
E20D	21258ABC	0

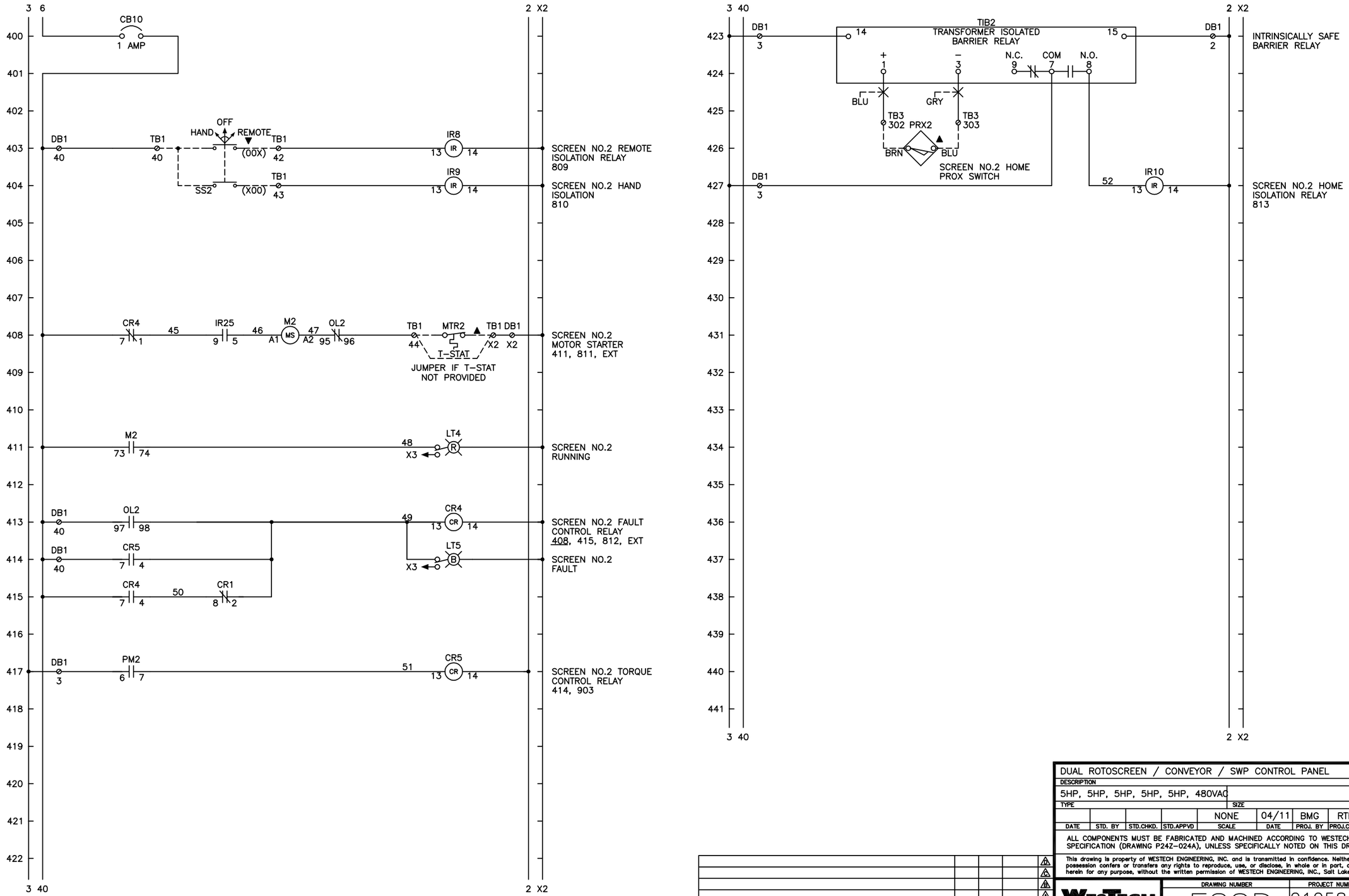

REVISION	BY	CHKD	DATE	LTR
				0
				0
				0
				0
				0

DUAL ROTOSCREEN / CONVEYOR / SWP CONTROL PANEL

DESCRIPTION

5HP, 5HP, 5HP, 5HP, 5HP, 480VAC

TYPE				SIZE				
				NONE	04/11	BMG	RTH	RTH
DATE	STD. BY	STD.CHKD.	STD.APPVD	SCALE	DATE	PROJ. BY	PROJ.CHKD.	PROJ.APPVD

ALL COMPONENTS MUST BE FABRICATED AND MACHINED ACCORDING TO WESTECH STANDARD SPECIFICATION (DRAWING P24Z–024A), UNLESS SPECIFICALLY NOTED ON THIS DRAWING.

This drawing is property of WESTECH ENGINEERING, INC. and is transmitted in confidence. Neither receipt nor possession confers or transfers any rights to reproduce, use, or disclose, in whole or in part, data contained herein for any purpose, without the written permission of WESTECH ENGINEERING, INC., Salt Lake City, Utah

WESTECH

DRAWING NUMBER	PROJECT NUMBER	REV.
E20D	21258ABC	0

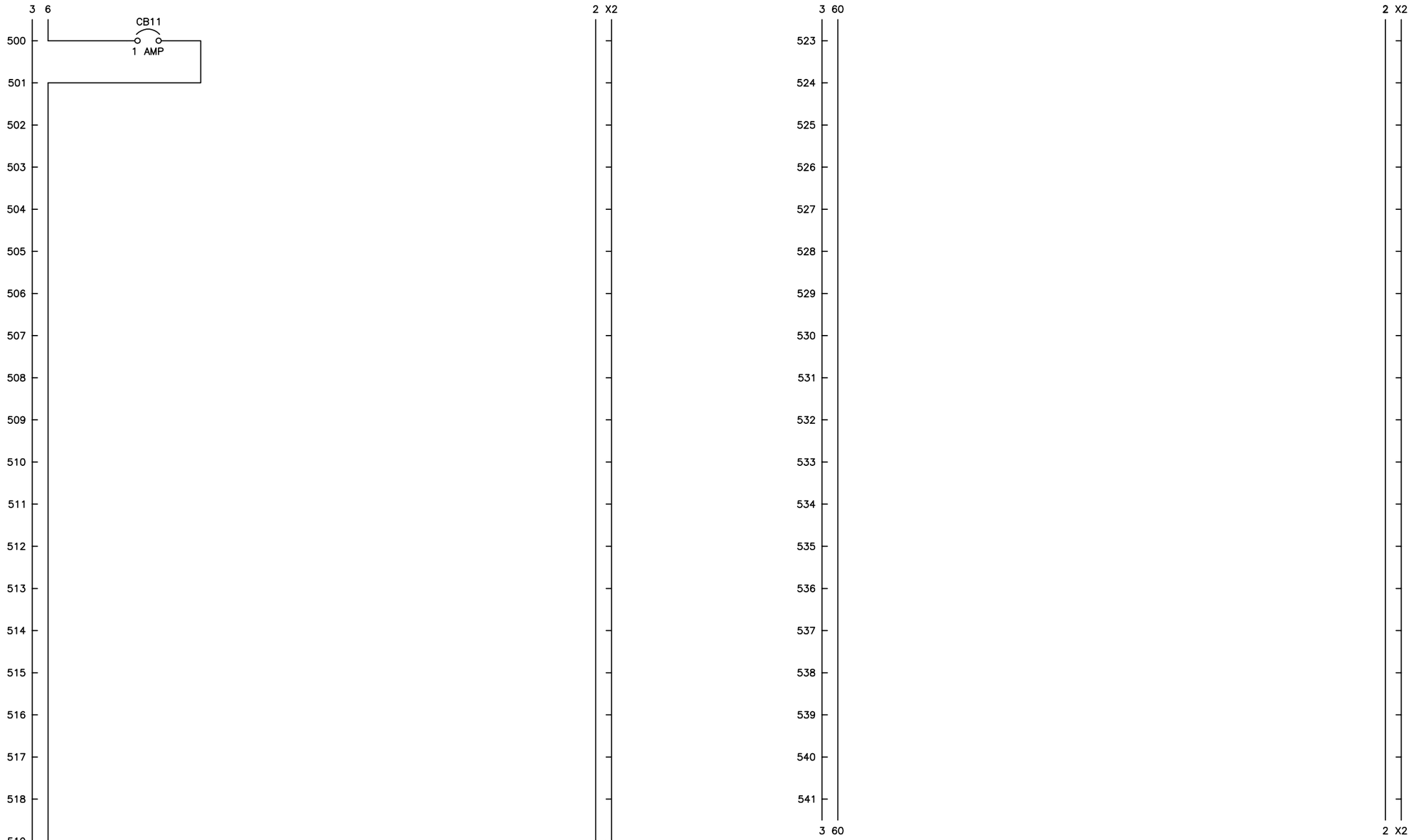

REVISION	BY	CHKD	DATE	LTR
				A
				A
				A
				A

DUAL ROTOSCREEN / CONVEYOR / SWP CONTROL PANEL

DESCRIPTION

5HP, 5HP, 5HP, 5HP, 5HP, 480VAC

TYPE | SIZE

DATE	STD. BY	STD.CHKD.	STD.APPVD	SCALE	DATE	PROJ. BY	PROJ.CHKD.	PROJ.APPVD
				NONE	04/11	BMG	RTH	RTH

ALL COMPONENTS MUST BE FABRICATED AND MACHINED ACCORDING TO WESTECH STANDARD SPECIFICATION (DRAWING P24Z-024A), UNLESS SPECIFICALLY NOTED ON THIS DRAWING.

This drawing is property of WESTECH ENGINEERING, INC. and is transmitted in confidence. Neither receipt nor possession confers or transfers any rights to reproduce, use, or disclose, in whole or in part, data contained herein for any purpose, without the written permission of WESTECH ENGINEERING, INC., Salt Lake City, Utah

WESTECH

DRAWING NUMBER	PROJECT NUMBER	REV.
E20D	21258ABC	0

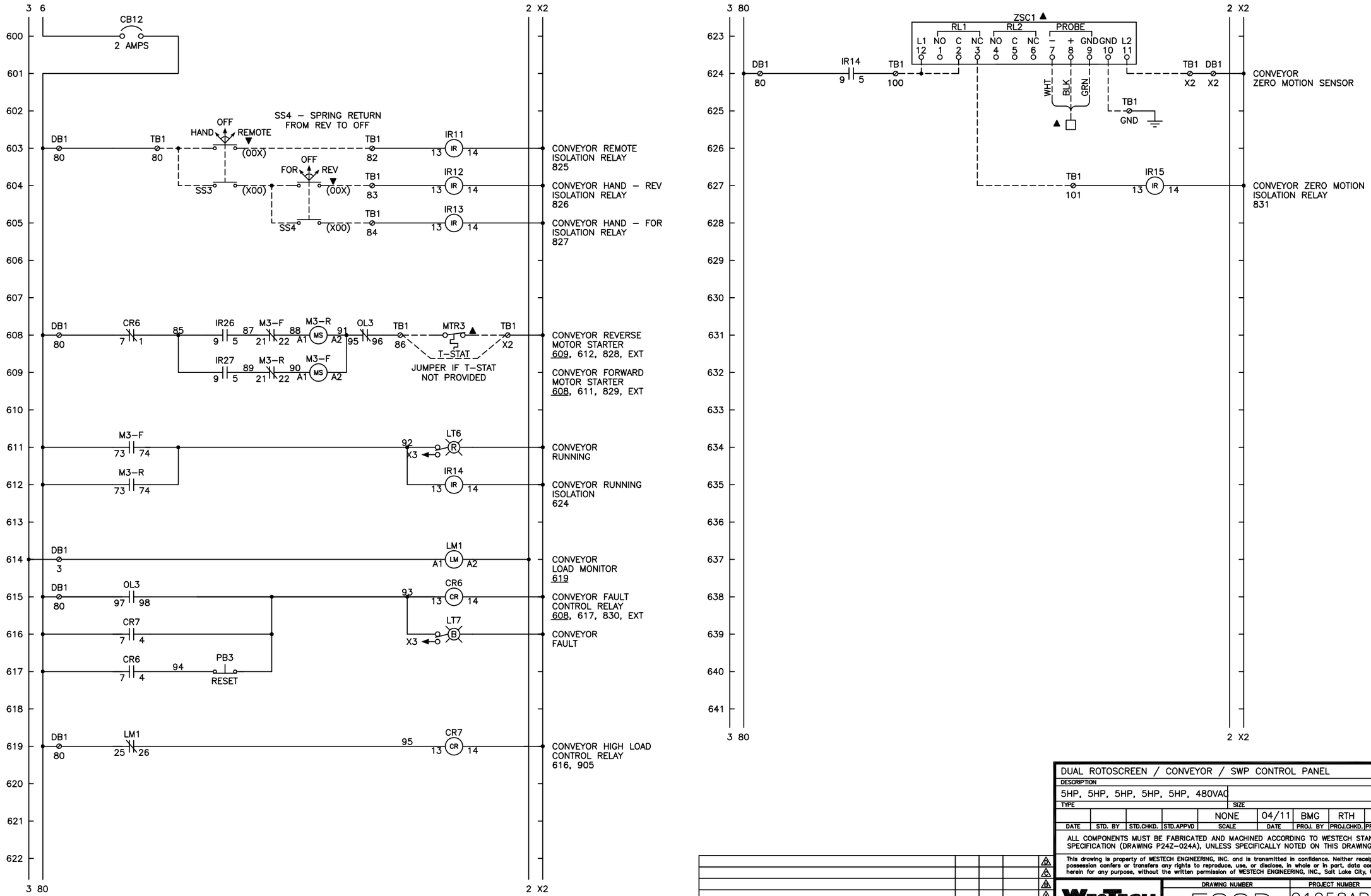

REVISION	BY	CHKD	DATE	LTR
				0
				0
				0
				0
				0

DUAL ROTOSCREEN / CONVEYOR / SWP CONTROL PANEL

DESCRIPTION

5HP, 5HP, 5HP, 5HP, 5HP, 480VAC

TYPE				SIZE				
				NONE	04/11	BMG	RTH	RTH
DATE	STD. BY	STD.CHKD.	STD.APPVD	SCALE	DATE	PROJ. BY	PROJ.CHKD.	PROJ.APPVD

ALL COMPONENTS MUST BE FABRICATED AND MACHINED ACCORDING TO WESTECH STANDARD SPECIFICATION (DRAWING P24Z–024A), UNLESS SPECIFICALLY NOTED ON THIS DRAWING.

This drawing is property of WESTECH ENGINEERING, INC. and is transmitted in confidence. Neither receipt nor possession confers or transfers any rights to reproduce, use, or disclose, in whole or in part, data contained herein for any purpose, without the written permission of WESTECH ENGINEERING, INC., Salt Lake City, Utah

WESTECH

DRAWING NUMBER	PROJECT NUMBER	REV.
E20D	21258ABC	0

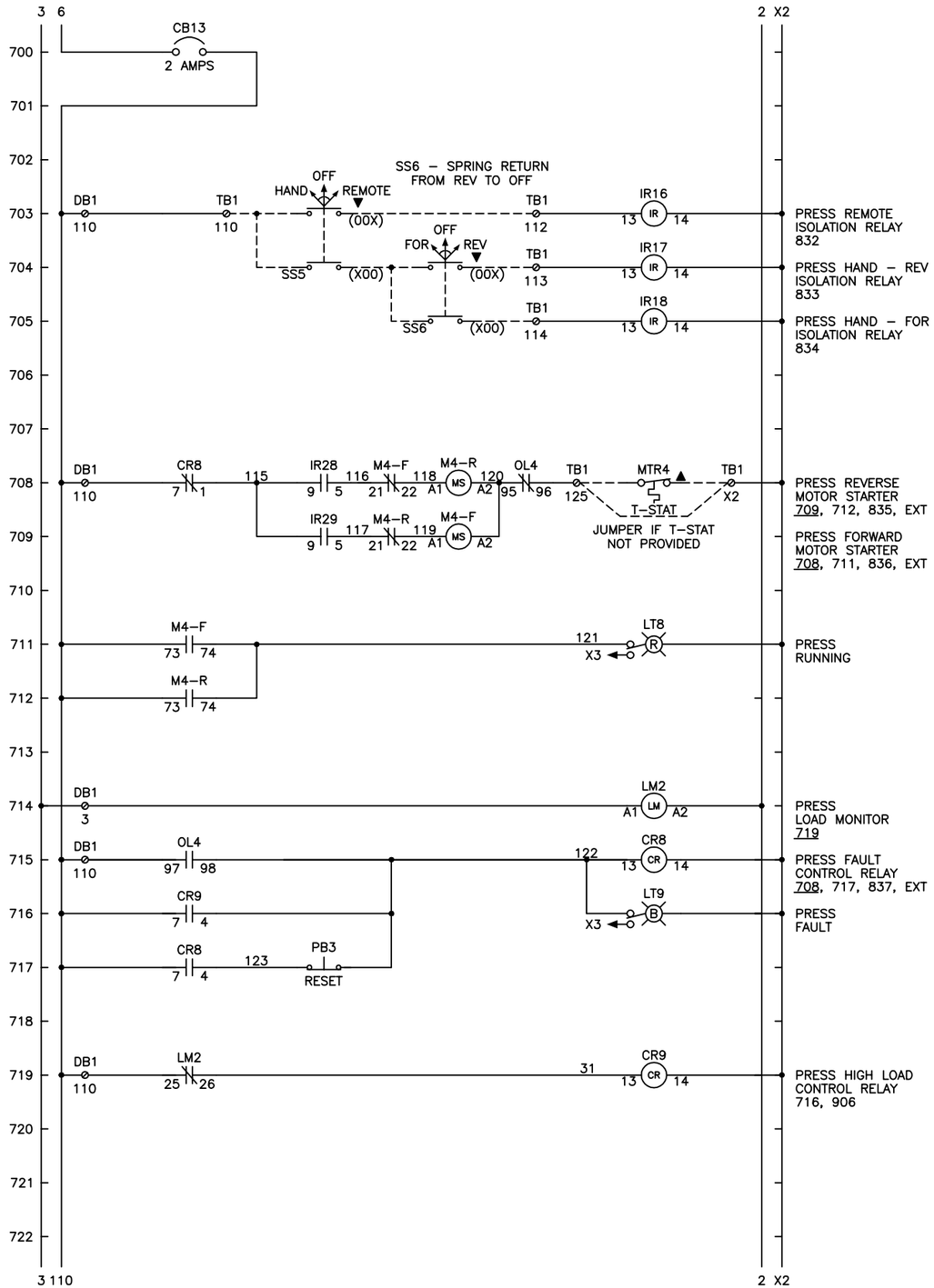

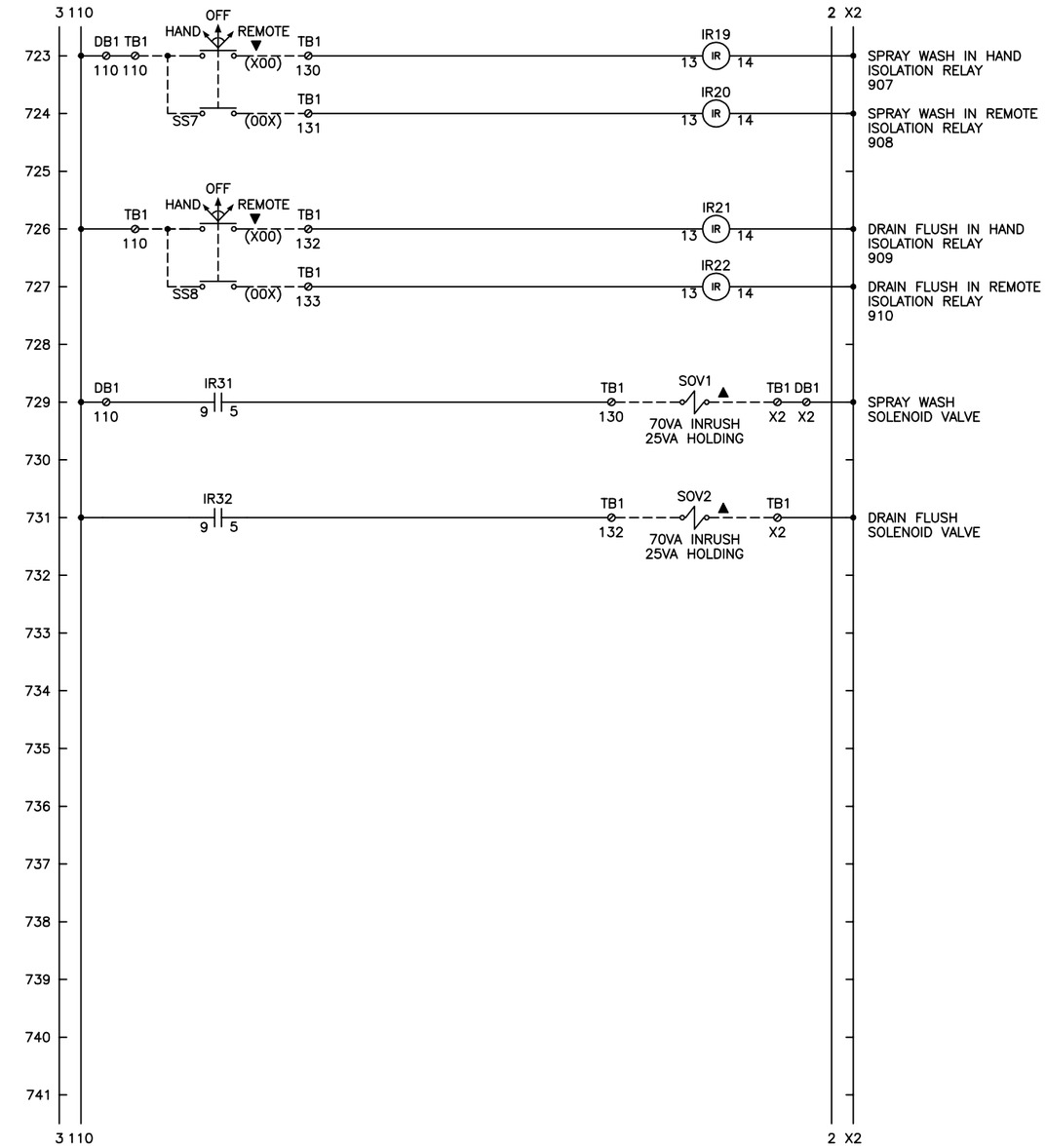

REVISION	BY	CHKD	DATE	LTR
				1
				2
				3
				4
				5

DUAL ROTOSCREEN / CONVEYOR / SWP CONTROL PANEL

DESCRIPTION: 5HP, 5HP, 5HP, 5HP, 5HP, 480VAC

TYPE				SIZE				
				NONE	04/11	BMG	RTH	RTH
DATE	STD. BY	STD.CHKD.	STD.APPVD	SCALE	DATE	PROJ. BY	PROJ.CHKD.	PROJ.APPVD

ALL COMPONENTS MUST BE FABRICATED AND MACHINED ACCORDING TO WESTECH STANDARD SPECIFICATION (DRAWING P24Z–024A), UNLESS SPECIFICALLY NOTED ON THIS DRAWING.

This drawing is property of WESTECH ENGINEERING, INC. and is transmitted in confidence. Neither receipt nor possession confers or transfers any rights to reproduce, use, or disclose, in whole or in part, data contained herein for any purpose, without the written permission of WESTECH ENGINEERING, INC., Salt Lake City, Utah

WESTECH

DRAWING NUMBER	PROJECT NUMBER	REV.
E20D	21258ABC	0

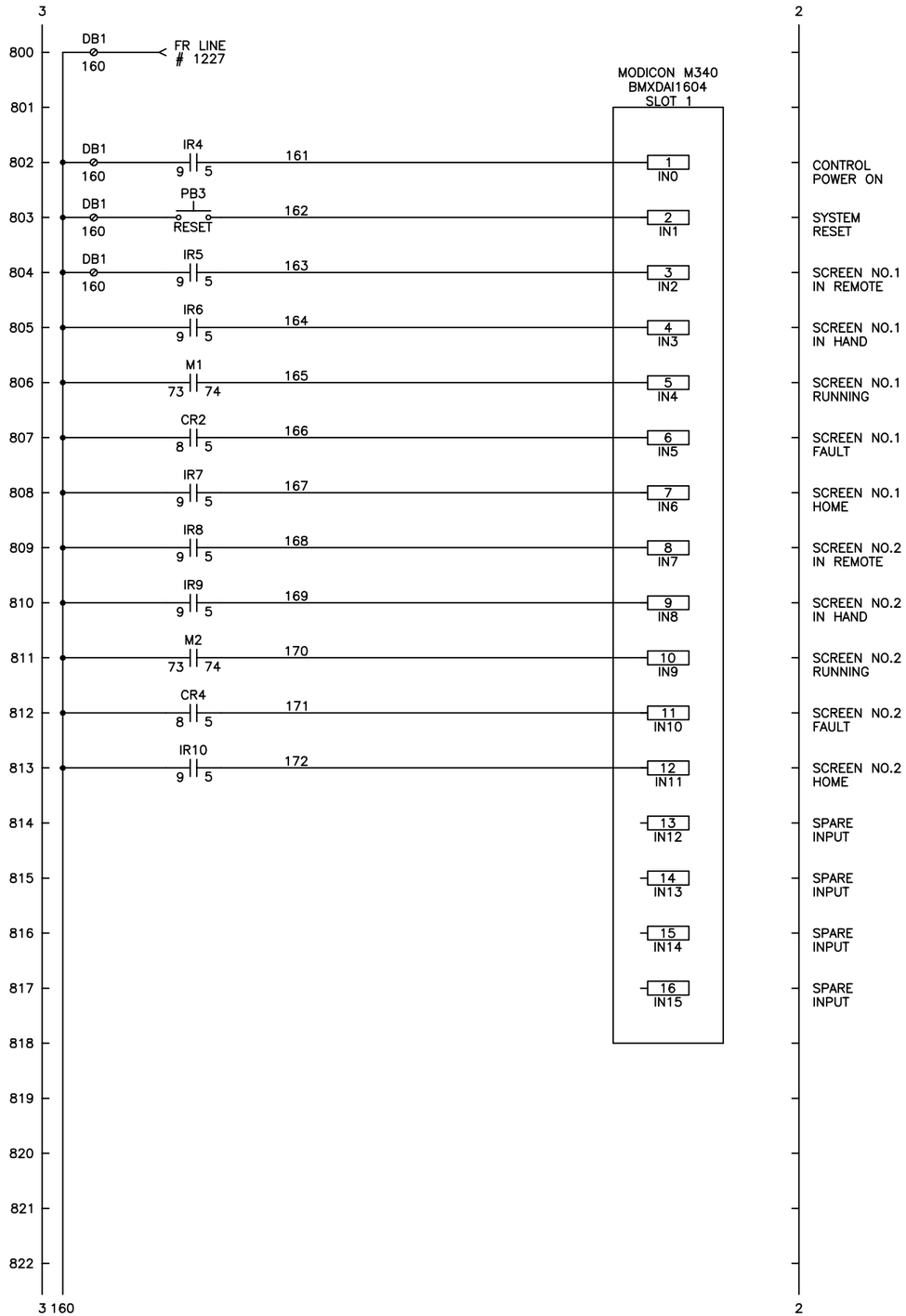

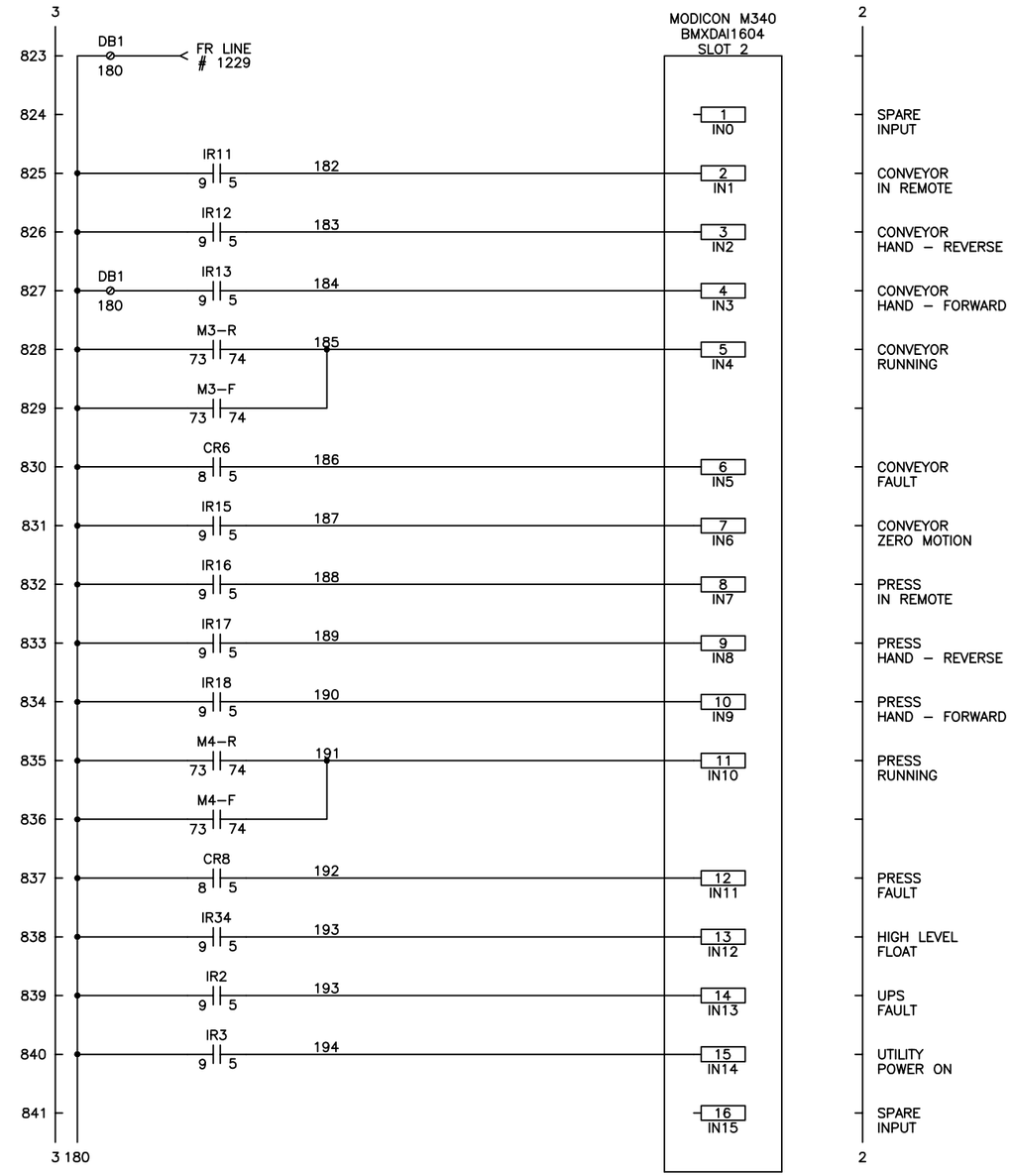

REVISION	BY	CHKD	DATE	LTR
				3
				2
				1
				0

DUAL ROTOSCREEN / CONVEYOR / SWP CONTROL PANEL

DESCRIPTION

5HP, 5HP, 5HP, 5HP, 5HP, 480VAC

TYPE | SIZE

DATE	STD. BY	STD.CHKD.	STD.APPVD	SCALE	DATE	PROJ. BY	PROJ.CHKD.	PROJ.APPVD
				NONE	04/11	BMG	RTH	RTH

ALL COMPONENTS MUST BE FABRICATED AND MACHINED ACCORDING TO WESTECH STANDARD SPECIFICATION (DRAWING P24Z–024A), UNLESS SPECIFICALLY NOTED ON THIS DRAWING.

This drawing is property of WESTECH ENGINEERING, INC. and is transmitted in confidence. Neither receipt nor possession confers or transfers any rights to reproduce, use, or disclose, in whole or in part, data contained herein for any purpose, without the written permission of WESTECH ENGINEERING, INC., Salt Lake City, Utah

WESTECH

DRAWING NUMBER	PROJECT NUMBER	REV.
E20D	21258ABC	0

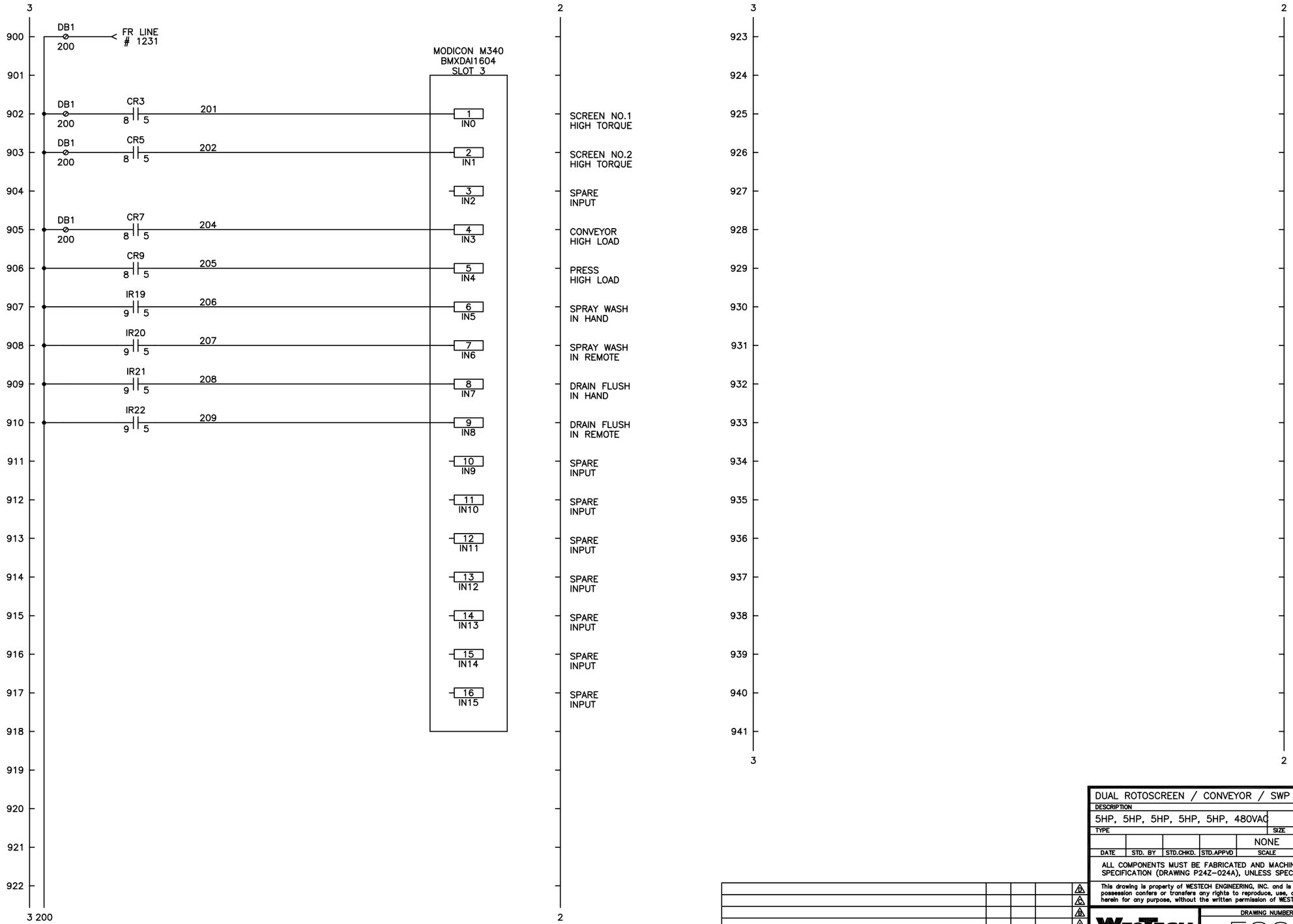

REVISION	BY	CHKD	DATE	LTR
				A
				A
				B
				A
				A

DUAL ROTOSCREEN / CONVEYOR / SWP CONTROL PANEL

DESCRIPTION

5HP, 5HP, 5HP, 5HP, 5HP, 480VAC

TYPE | SIZE

DATE	STD. BY	STD.CHKD.	STD.APPVD	SCALE	DATE	PROJ. BY	PROJ.CHKD.	PROJ.APPVD
				NONE	04/11	BMG	RTH	RTH

ALL COMPONENTS MUST BE FABRICATED AND MACHINED ACCORDING TO WESTECH STANDARD SPECIFICATION (DRAWING P24Z-024A), UNLESS SPECIFICALLY NOTED ON THIS DRAWING.

This drawing is property of WESTECH ENGINEERING, INC. and is transmitted in confidence. Neither receipt nor possession confers or transfers any rights to reproduce, use, or disclose, in whole or in part, data contained herein for any purpose, without the written permission of WESTECH ENGINEERING, INC., Salt Lake City, Utah

WESTECH

DRAWING NUMBER	PROJECT NUMBER	REV.
E20D	21258ABC	0

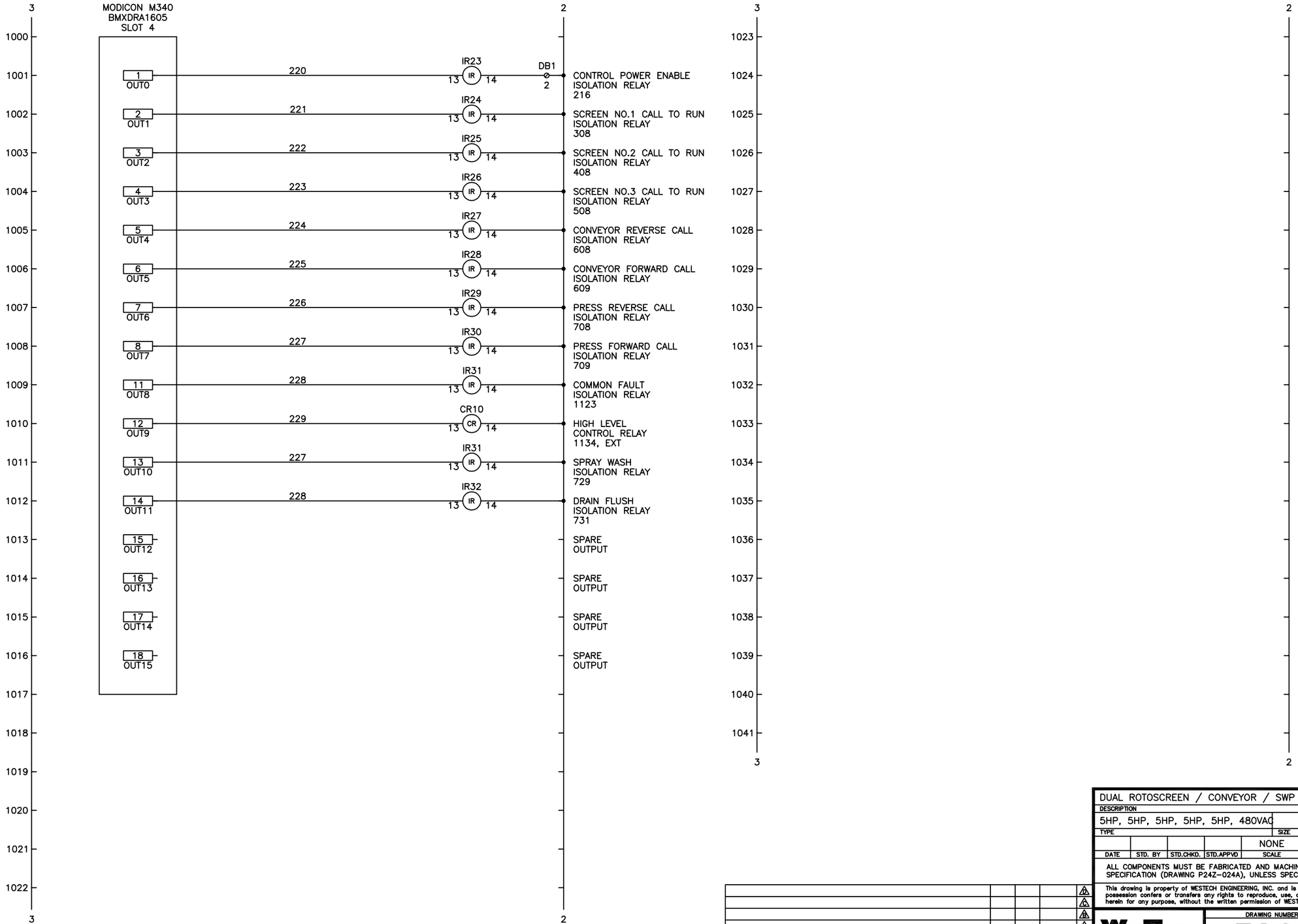

REVISION	BY	CHKD	DATE	LTR
				A
				A
				A
				A

DUAL ROTOSCREEN / CONVEYOR / SWP CONTROL PANEL

DESCRIPTION

5HP, 5HP, 5HP, 5HP, 5HP, 480VAC

TYPE | SIZE

DATE	STD. BY	STD.CHKD.	STD.APPVD	SCALE	DATE	PROJ. BY	PROJ.CHKD.	PROJ.APPVD
				NONE	04/11	BMG	RTH	RTH

ALL COMPONENTS MUST BE FABRICATED AND MACHINED ACCORDING TO WESTECH STANDARD SPECIFICATION (DRAWING P24Z-024A), UNLESS SPECIFICALLY NOTED ON THIS DRAWING.

This drawing is property of WESTECH ENGINEERING, INC. and is transmitted in confidence. Neither receipt nor possession confers or transfers any rights to reproduce, use, or disclose, in whole or in part, data contained herein for any purpose, without the written permission of WESTECH ENGINEERING, INC., Salt Lake City, Utah

WESTECH

DRAWING NUMBER	PROJECT NUMBER	REV.
E20D	21258ABC	0

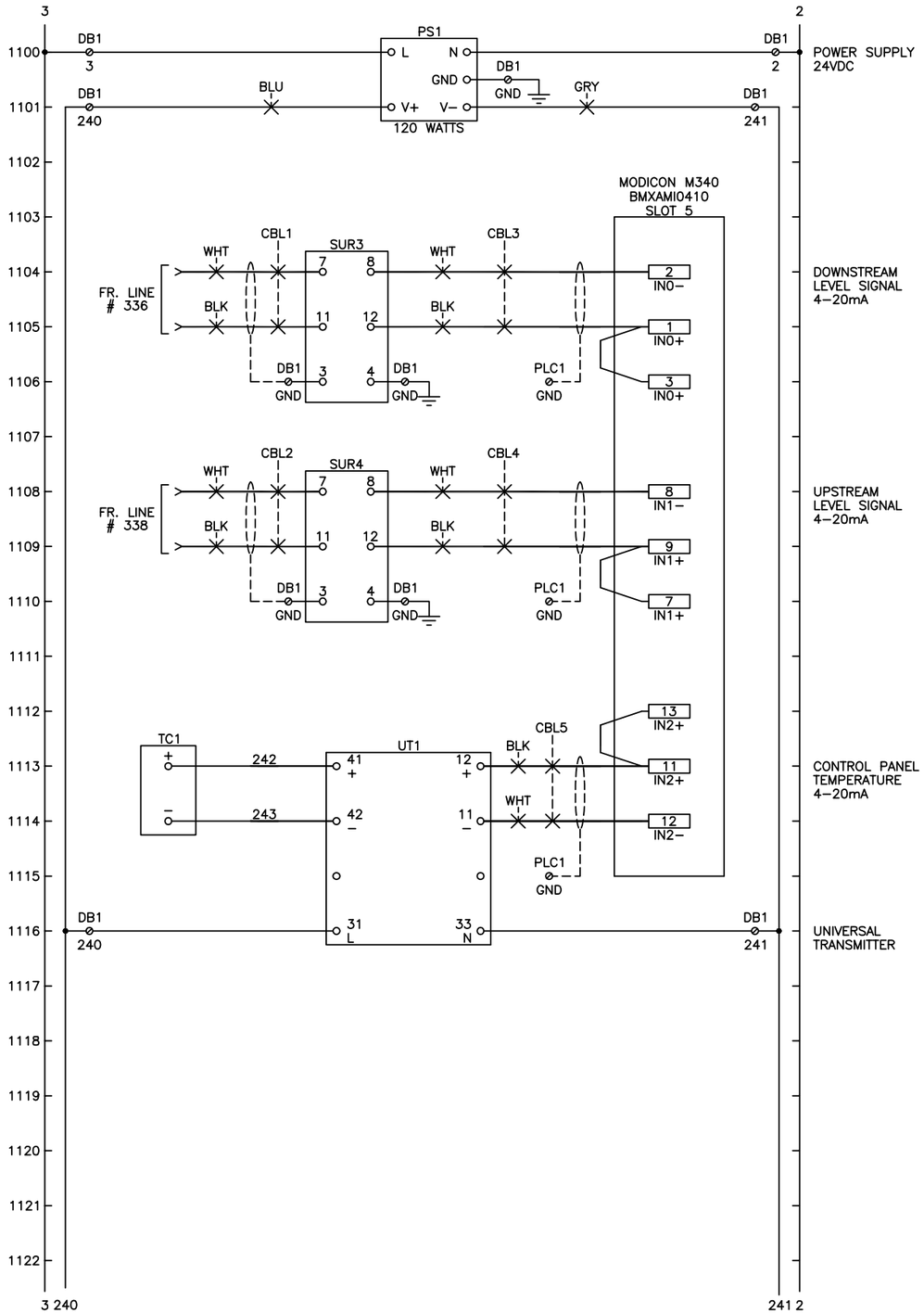

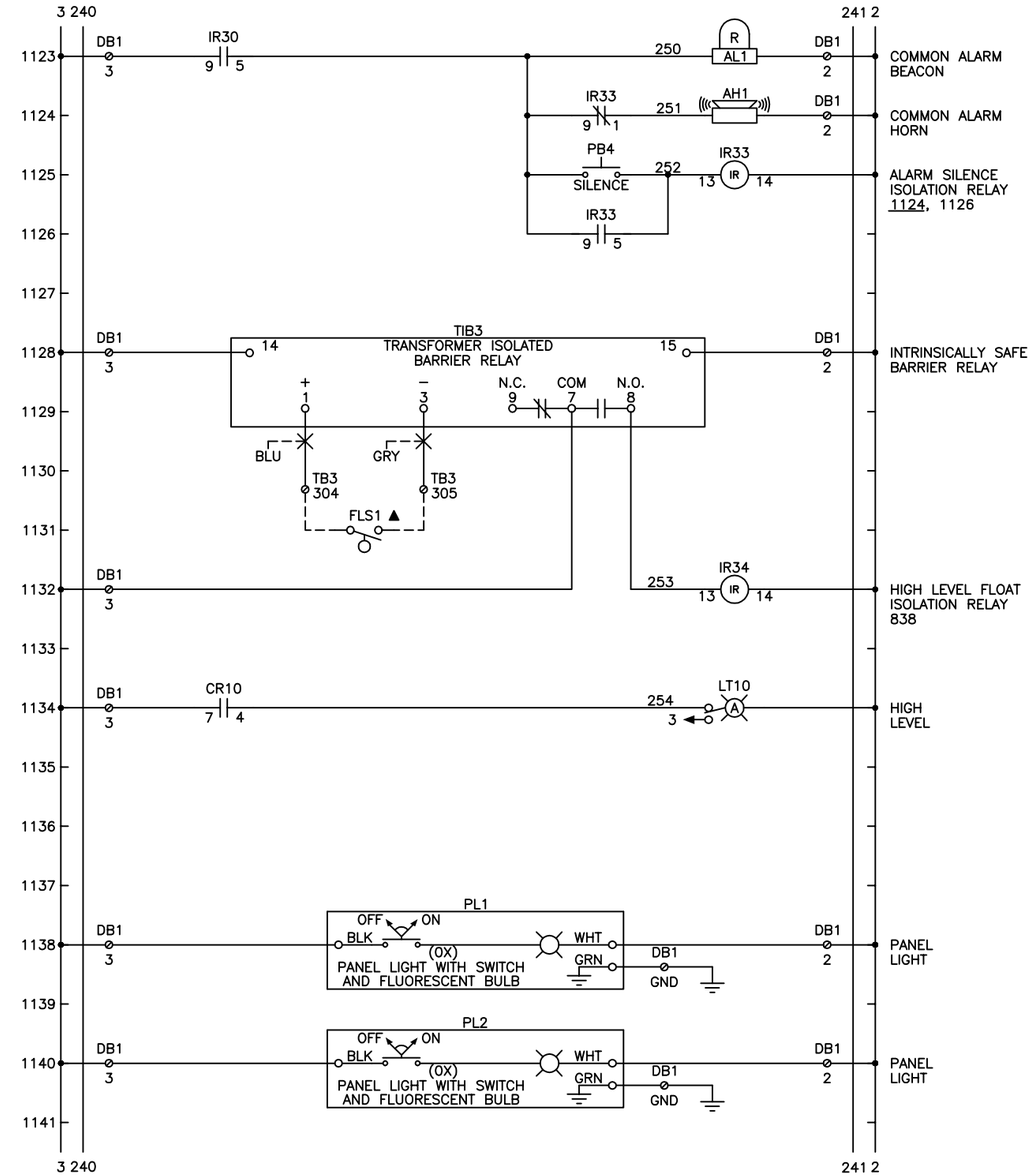

DUAL ROTOSCREEN / CONVEYOR / SWP CONTROL PANEL

DESCRIPTION: 5HP, 5HP, 5HP, 5HP, 5HP, 480VAC

TYPE | SIZE

DATE	STD. BY	STD.CHKD.	STD.APPVD	SCALE	DATE	PROJ. BY	PROJ.CHKD.	PROJ.APPVD
				NONE	04/11	BMG	RTH	RTH

ALL COMPONENTS MUST BE FABRICATED AND MACHINED ACCORDING TO WESTECH STANDARD SPECIFICATION (DRAWING P24Z–024A), UNLESS SPECIFICALLY NOTED ON THIS DRAWING.

This drawing is property of WESTECH ENGINEERING, INC. and is transmitted in confidence. Neither receipt nor possession confers or transfers any rights to reproduce, use, or disclose, in whole or in part, data contained herein for any purpose, without the written permission of WESTECH ENGINEERING, INC., Salt Lake City, Utah

REVISION	BY	CHKD	DATE	LTR
				4
				3
				2
				1

WESTECH

DRAWING NUMBER	PROJECT NUMBER	REV.
E20D	21258ABC	0

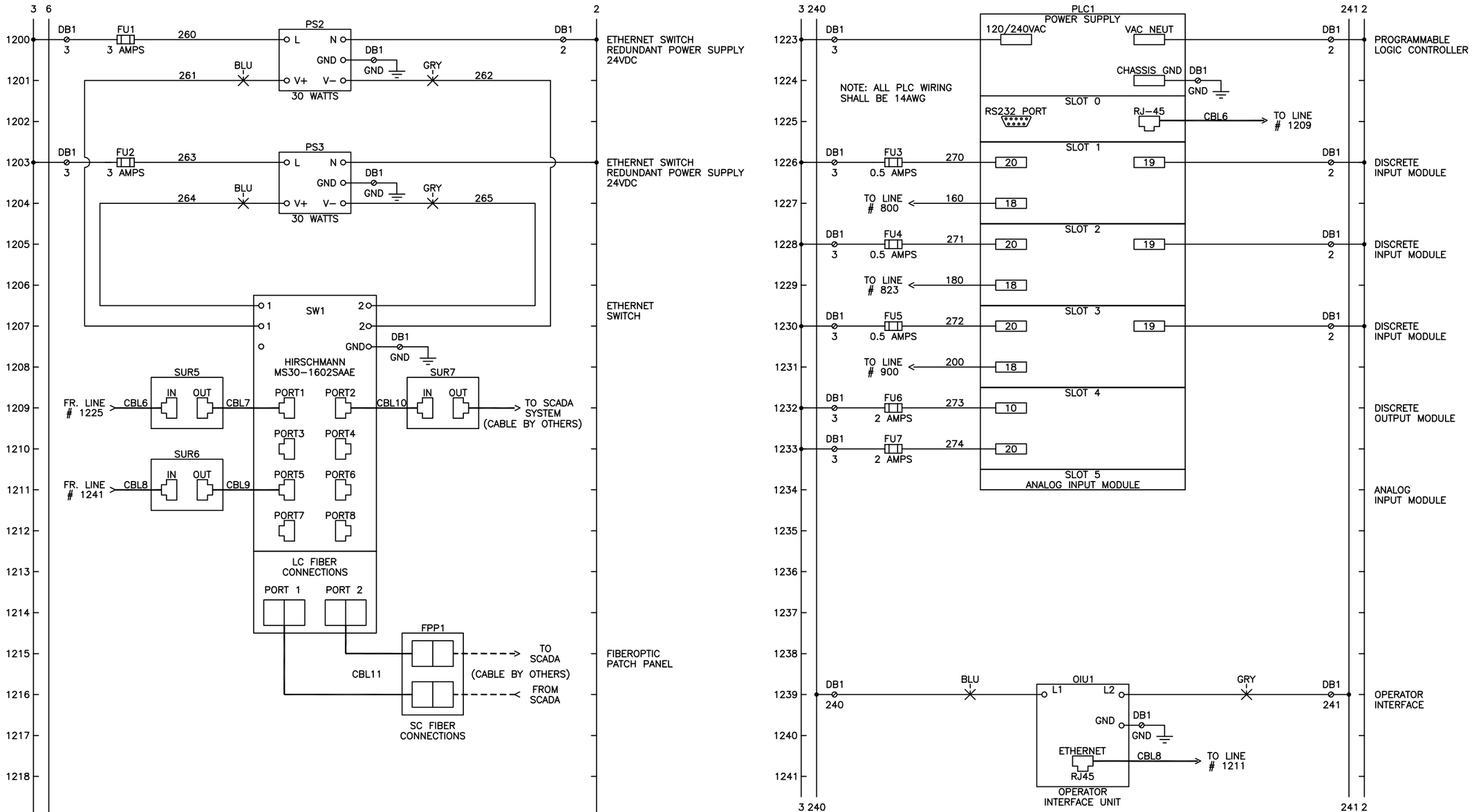

DUAL ROTOSCREEN / CONVEYOR / SWP CONTROL PANEL

DESCRIPTION

5HP, 5HP, 5HP, 5HP, 5HP, 480VAC

TYPE				SIZE				
				NONE	04/11	BMG	RTH	RTH
DATE	STD. BY	STD.CHKD.	STD.APPVD	SCALE	DATE	PROJ. BY	PROJ.CHKD.	PROJ.APPVD

ALL COMPONENTS MUST BE FABRICATED AND MACHINED ACCORDING TO WESTECH STANDARD SPECIFICATION (DRAWING P24Z-024A), UNLESS SPECIFICALLY NOTED ON THIS DRAWING.

This drawing is property of WESTECH ENGINEERING, INC. and is transmitted in confidence. Neither receipt nor possession confers or transfers any rights to reproduce, use, or disclose, in whole or in part, data contained herein for any purpose, without the written permission of WESTECH ENGINEERING, INC., Salt Lake City, Utah

REVISION	BY	CHKD	DATE	LTR
				4
				3
				2
				1

WESTECH

DRAWING NUMBER	PROJECT NUMBER	REV.
E20D	21258ABC	0

FIELD WIRING DIAGRAM

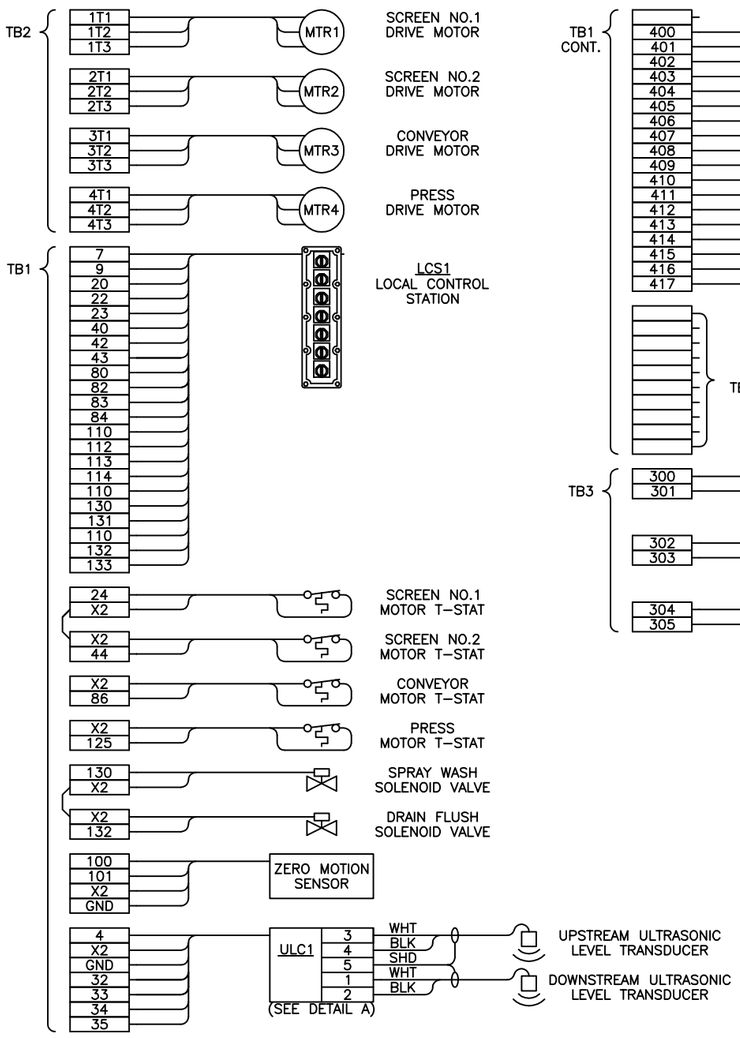

FIELD WIRING DIAGRAM

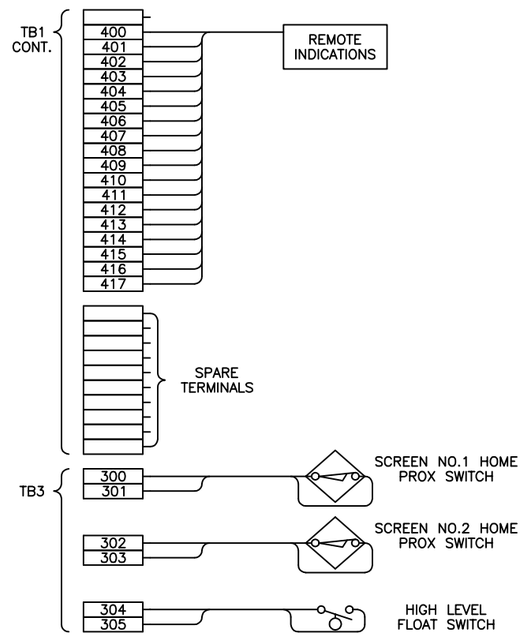

TIB1,2 WIRING DETAIL

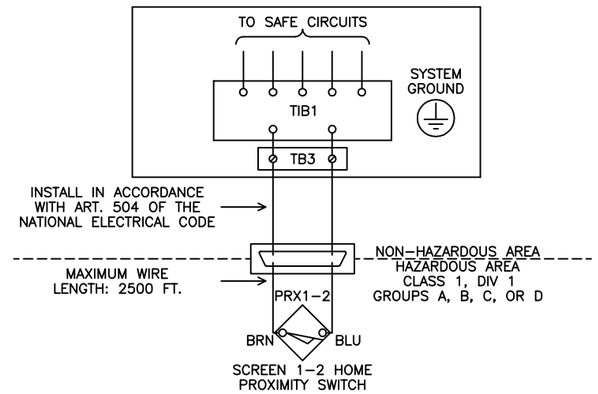

NOTES:
1. ENSURE CONTROL PANEL IS CONNECTED TO GROUND.
2. CAUTION: MAINTAIN SEPARATION BETWEEN INTRINSICALLY SAFE WIRING AND OTHER WIRING.

TIB3 WIRING DETAIL

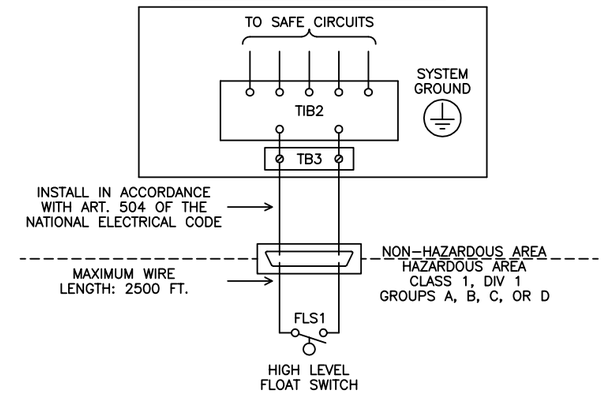

NOTES:
1. ENSURE CONTROL PANEL IS CONNECTED TO GROUND.
2. CAUTION: MAINTAIN SEPARATION BETWEEN INTRINSICALLY SAFE WIRING AND OTHER WIRING.

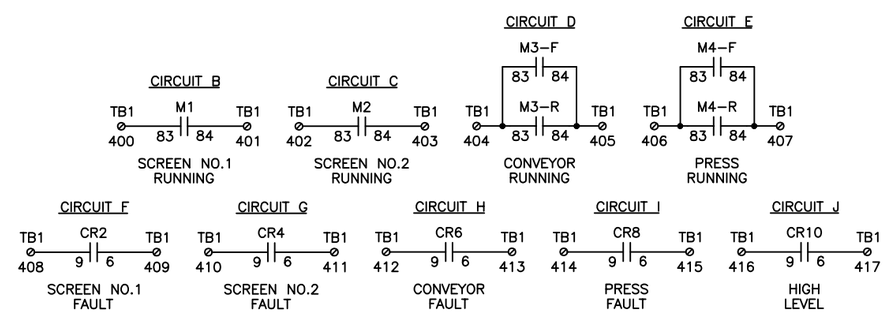

MAX. CONTROLLED LOAD: 10A @ 120VAC

NOTE: BRANCH CIRCUIT PROTECTION PROVIDED BY OTHERS PER N.E.C.

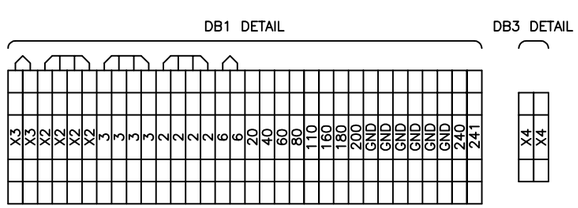

REVISION	BY	CHKD	DATE	LTR
				0
				0
				0
				0

DUAL ROTOSCREEN / CONVEYOR / SWP CONTROL PANEL

DESCRIPTION: 5HP, 5HP, 5HP, 5HP, 5HP, 480VAC

TYPE				SIZE				
				NONE	04/11	BMG	RTH	RTH
DATE	STD. BY	STD.CHKD.	STD.APPVD	SCALE	DATE	PROJ. BY	PROJ.CHKD.	PROJ.APPVD

ALL COMPONENTS MUST BE FABRICATED AND MACHINED ACCORDING TO WESTECH STANDARD SPECIFICATION (DRAWING P24Z-024A), UNLESS SPECIFICALLY NOTED ON THIS DRAWING.

This drawing is property of WESTECH ENGINEERING, INC. and is transmitted in confidence. Neither receipt nor possession confers or transfers any rights to reproduce, use, or disclose, in whole or in part, data contained herein for any purpose, without the written permission of WESTECH ENGINEERING, INC., Salt Lake City, Utah

WESTECH

DRAWING NUMBER	PROJECT NUMBER	REV.
E20D	21258ABC	0

DEVICE SETTINGS

BMXP342020	DISCRETE IN	DISCRETE OUT	ANALOG IN
☐ RUN	0 1 2 3	0 1 2 3	☐ POWER
☐ ERR	4 5 6 7	4 5 6 7	
☐ I/O	8 9 10 11	8 9 10 11	
☐ SER COM	12 13 14 15	12 13 14 15	
☐ CARD ERR			
☐ ETH ACT	QTY: 3	QTY: 1	QTY: 1
☐ ETH ERR	SLOT 1–3	SLOT 4	SLOT 5

SLOT 1 – DISCRETE INPUTS

IN0	CONTROL POWER ON
IN1	SYSTEM RESET
IN2	SCREEN NO.1 IN REMOTE
IN3	SCREEN NO.1 IN HAND
IN4	SCREEN NO.1 RUNNING
IN5	SCREEN NO.1 FAULT
IN6	SCREEN NO.1 HOME
IN7	SCREEN NO.2 IN REMOTE
IN8	SCREEN NO.2 IN HAND
IN9	SCREEN NO.2 RUNNING
IN10	SCREEN NO.2 FAULT
IN11	SCREEN NO.2 HOME
IN12	SPARE
IN13	SPARE
IN14	SPARE
IN15	SPARE

SLOT 2 – DISCRETE INPUTS

IN0	SPARE
IN1	CONVEYOR IN REMOTE
IN2	CONVEYOR HAND–REVERSE
IN3	CONVEYOR HAND–FORWARD
IN4	CONVEYOR RUNNING
IN5	CONVEYOR FAULT
IN6	CONVEYOR ZERO MOTION
IN7	PRESS IN REMOTE
IN8	PRESS HAND–REVERSE
IN9	PRESS HAND–FORWARD
IN10	PRESS RUNNING
IN11	PRESS FAULT
IN12	HIGH LEVEL FLOAT
IN13	UPS FAULT
IN14	UTILITY POWER ON
IN15	SPARE

SLOT 3 – DISCRETE INPUTS

IN0	SCREEN NO.1 HIGH TORQUE
IN1	SCREEN NO.2 HIGH TORQUE
IN2	SPARE
IN3	CONVEYOR HIGH LOAD
IN4	PRESS HIGH LOAD
IN5	SPRAY WASH IN HAND
IN6	SPRAY WASH IN REMOTE
IN7	DRAIN FLUSH IN HAND
IN8	DRAIN FLUSH IN REMOTE
IN9	SPARE
IN10	SPARE
IN11	SPARE
IN12	SPARE
IN13	SPARE
IN14	SPARE
IN15	SPARE

SLOT 4 – DISCRETE OUTPUTS

OUT0	CONTROL POWER ENABLE
OUT1	SCREEN NO.1 CALL TO RUN
OUT2	SCREEN NO.2 CALL TO RUN
OUT3	SPARE
OUT4	CONVEYOR REVERSE CALL TO RUN
OUT5	CONVEYOR FORWARD CALL TO RUN
OUT6	PRESS REVERSE CALL TO RUN
OUT7	PRESS FORWARD CALL TO RUN
OUT8	COMMON FAULT
OUT9	HIGH LEVEL
OUT10	SPRAY WASH CALL TO RUN
OUT11	DRAIN FLUSH CALL TO RUN
OUT12	SPARE
OUT13	SPARE
OUT14	SPARE
OUT15	SPARE

SLOT 5 – ANALOG INPUTS

IN0	DOWNSTREAM LEVEL
IN1	UPSTREAM LEVEL
IN2	PANEL TEMPERATURE
IN3	SPARE

PLC1 – COMMUNICATIONS SETUP

CHANNEL 0 – SYSTEM

PARAMETER	VALUE
DRIVER	DF1 FULL DUPLEX
BAUD RATE	9600
PARITY	EVEN
STOP BITS	1
SOURCE ID	1
CONTROL LINE	NO HANDSHAKING
ERROR DETECTION	BCC
EMBEDDED RESPONSES	ENABLED

CHANNEL 1 – SYSTEM

PARAMETER	LCP–101	LCP–104
IP ADDRESS	TBD	TBD
SUBNET MASK	TBD	TBD
GATEWAY ADDRESS	TBD	TBD
DNS PREFERRED	TBD	TBD
DNS ALTERNATE	TBD	TBD
BOOTP ENABLE	NO	NO

DEVICE SETTINGS

PLC1 – SCADA INTERFACE

REGISTER NUMBER	DESCRIPTION	DATA TYPE	FUNCTION
TBD	EMERGENCY STOP PRESSED	BIT	TO SCADA
TBD	SCREEN NO.1 HIGH TORQUE	BIT	TO SCADA
TBD	SCREEN NO.1 IN REMOTE	BIT	TO SCADA
TBD	SCREEN NO.1 IN HAND	BIT	TO SCADA
TBD	SCREEN NO.1 RUNNING	BIT	TO SCADA
TBD	SCREEN NO.1 FAULT	BIT	TO SCADA
TBD	SCREEN NO.2 HIGH TORQUE	BIT	TO SCADA
TBD	SCREEN NO.2 IN REMOTE	BIT	TO SCADA
TBD	SCREEN NO.2 IN HAND	BIT	TO SCADA
TBD	SCREEN NO.2 RUNNING	BIT	TO SCADA
TBD	SCREEN NO.2 FAULT	BIT	TO SCADA
TBD	CONVEYOR ZERO MOTION	BIT	TO SCADA
TBD	CONVEYOR IN REMOTE	BIT	TO SCADA
TBD	CONVEYOR IN HAND–FORWARD	BIT	TO SCADA
TBD	CONVEYOR IN HAND–REVERSE	BIT	TO SCADA
TBD	CONVEYOR RUNNING	BIT	TO SCADA
TBD	CONVEYOR FAULT	BIT	TO SCADA
TBD	PRESS IN REMOTE	BIT	TO SCADA
TBD	PRESS IN HAND–FORWARD	BIT	TO SCADA
TBD	PRESS IN HAND–REVERSE	BIT	TO SCADA
TBD	PRESS RUNNING	BIT	TO SCADA
TBD	PRESS FAULT	BIT	TO SCADA
TBD	HIGH LEVEL FLOAT SWITCH	BIT	TO SCADA
TBD	SCREEN DIFFERENTIAL LEVEL	INTEGER	TO SCADA
TBD	SCREEN UPSTREAM LEVEL	INTEGER	TO SCADA
TBD	SCREEN DOWNSTREAM LEVEL	INTEGER	TO SCADA
TBD	SCREEN NO.1 NUMBER OF STARTS	INTEGER	TO SCADA
TBD	SCREEN NO.1 RUNTIME (0.1 HOUR INCREMENTS)	INTEGER	TO SCADA
TBD	SCREEN NO.2 NUMBER OF STARTS	INTEGER	TO SCADA
TBD	SCREEN NO.2 RUNTIME (0.1 HOUR INCREMENTS)	INTEGER	TO SCADA
TBD	CONVEYOR NUMBER OF STARTS	INTEGER	TO SCADA
TBD	CONVEYOR RUNTIME (0.1 HOUR INCREMENTS)	INTEGER	TO SCADA
TBD	PRESS NUMBER OF STARTS	INTEGER	TO SCADA
TBD	PRESS RUNTIME (0.1 HOUR INCREMENTS)	INTEGER	TO SCADA
TBD	CONTROL PANEL TEMPERATURE (0–100°C)	INTEGER	TO SCADA
TBD	POWER FAIL BIT (HEARTBEAT)	BIT	TO SCADA

PLC1 – SETTINGS

REGISTER NUMBER	DESCRIPTION	TIMER RESOLUTION	FACTORY SETTINGS
%MW700	SCREEN AUTO STEP COUNTER	STEPS	1
%MW702	SCREEN DWELL TIME	MIN:SEC	00:15
%MW704	SCREEN REPEAT CYCLE OFF TIME	HR:MIN	08:00
%MW706	SCREEN HIGH LEVEL OFF DELAY TIME	MIN:SEC	00:30
%MW708	SCREEN CYCLE COUNTER (STARTS CONVEYOR)	CYCLES	10
%MW710	CONVEYOR OFF DELAY TIMER	MIN:SEC	00:30
%MW712	CONVEYOR ACCUMULATED RUN TIME	MIN:SEC	05:00
%MW714	PRESS INITIAL RUN TIME	MIN:SEC	00:03
%MW716	PRESS FORWARD RUN TIME	MIN:SEC	00:10
%MW718	PRESS FOR–REV DWELL RUN TIME	MIN:SEC	00:02
%MW720	PRESS REVERSE RUN TIME	MIN:SEC	00:00
%MW722	PRESS REV–FOR RUN TIME	MIN:SEC	00:00
%MW724	SPRAY WASH RUN TIME	MIN:SEC	00:05
%MW726	PRESS WASH CYCLE COUNTER	CYCLES	6
%MW728	PRESS DISCHARGE TIME	MIN:SEC	00:30
%MW730	DRAIN FLUSH RUN TIME	MIN:SEC	00:10

NOTES:
1. ABOVE IS A LISTING OF ALL THE FIELD SELECTABLE SETTINGS IN THE CONTROLLER.

DEVICE SETTINGS

AC1

AC COMP. ON/OFF	70 °F

LM1–2 – MOTOR LOAD MONITOR

DIAL	SETTING
COS MAX	MIN
COS MIN	MIN
TIME S	MIN
TIME R	MIN

NOTES:
1. THE LOAD MONITOR DIAL SHALL BE SET TO MINIMUM FROM THE FACTORY.
2. FIELD CONFIGURATION SHALL BE PERFORMED BY THE STARTUP TECHNICIAN PER THE APPROPRIATE TECHNICAL DOCUMENT.

TIB1–3

DIP SWITCH	SET AT
S1	I
S2	I
S3	I

OIU1 – COMMUNICATIONS SETUP

CHANNEL 0 – SYSTEM

PARAMETER	VALUE
DRIVER	DF1 FULL DUPLEX
BAUD RATE	9600
PARITY	EVEN
STOP BITS	1
SOURCE ID	1
CONTROL LINE	NO HANDSHAKING
ERROR DETECTION	BCC
EMBEDDED RESPONSES	ENABLED

CHANNEL 1 – SYSTEM

PARAMETER	LCP–101	LCP–104
IP ADDRESS	TBD	TBD
SUBNET MASK	TBD	TBD
GATEWAY ADDRESS	TBD	TBD
DNS PREFERRED	TBD	TBD
DNS ALTERNATE	TBD	TBD
BOOTP ENABLE	NO	NO

SW1 – COMMUNICATION SETUP

PARAMETER	LCP–101	LCP–104
IP ADDRESS	TBD	TBD
SUBNET MASK	TBD	TBD
GATEWAY ADDRESS	TBD	TBD
DNS PREFERRED	TBD	TBD
DNS ALTERNATE	TBD	TBD
BOOTP ENABLE	NO	NO

REVISION	BY	CHKD	DATE	LTR
				4
				5
				6
				3

DUAL ROTOSCREEN / CONVEYOR / SWP CONTROL PANEL

DESCRIPTION

5HP, 5HP, 5HP, 5HP, 5HP, 480VAC

TYPE				SIZE				
				NONE	04/11	BMG	RTH	RTH
DATE	STD. BY	STD.CHKD.	STD.APPVD	SCALE	DATE	PROJ. BY	PROJ.CHKD.	PROJ.APPVD

ALL COMPONENTS MUST BE FABRICATED AND MACHINED ACCORDING TO WESTECH STANDARD SPECIFICATION (DRAWING P24Z–024A), UNLESS SPECIFICALLY NOTED ON THIS DRAWING.

This drawing is property of WESTECH ENGINEERING, INC. and is transmitted in confidence. Neither receipt nor possession confers or transfers any rights to reproduce, use, or disclose, in whole or in part, data contained herein for any purpose, without the written permission of WESTECH ENGINEERING, INC., Salt Lake City, Utah

WESTECH

DRAWING NUMBER	PROJECT NUMBER	REV.
E20D	21258ABC	0

DEVICE SETTINGS

PM1–2

WINDOW NUMBER	FUNCTION DESCRIPTION	DEFAULT	FACTORY SETTING
04	PARAMETER LOCK	369	
05	MONITOR TYPE	OVERLOAD	
11	MAIN ALARM	100%	*
12	PRE–ALARM	100%	*
21	MAIN ALARM MARGIN	16%	10%
22	PRE–ALARM MARGIN	8%	5%
31	START–UP DELAY	2 SEC.	
32	RESPONSE DELAY	0.5 SEC.	
33	HYSTERESIS	0%	
41	MOTOR RATED POWER	3.0 HP	5.0 HP
42	MOTOR RATER CURRENT	5.6 AMP	7.6 AMP
61	MAIN ALARM LATCHED	OFF	
62	ALARM AT ZERO CURRENT	OFF	
63	MAIN ALARM (NO/NC)	NC	
64	PRE–ALARM (NO/NC)	NO	

NOTES:
1. FACTORY SETTING '*' NOTES PARAMTERS SET IN THE FIELD.
2. RELAYS CHANGE TO PROGRAMMED STATE ON POWER–UP.
3. THE ABOVE IS A PARTIAL PARAMETER LIST AND THEIR SETTINGS. FOR A COMPLETE LIST REFER TO THE OWNERS MANUAL.

UT1 – SETPOINTS

WINDOW NUMBER	FUNCTION DESCRIPTION	DEFAULT SETTING	SHOP SETTINGS	FIELD SETTINGS
TXT 3	INPUT TYPE	VOLT	LIN RESIST	LIN RESIST
TXT 4	INPUT RANGE	2–10	4–20	4–20
TXT 9	UNITS OF MEASURE	°C	°C	°C
TXT 10	SENSOR TYPE	TC	TC	TC
TXT 11	UNIT	°C	°C	°C
TXT 12	DECIMAL POINT	111.1	111.1	111.1
TXT 13	DISPLAY RANGE LOW	0.0	0.0	0.0
TXT 14	DISPLAY RANGE HIGH	100.0	100.0	*
TXT 15	DISPLAY	REL.UN	REL.UN	REL.UN
TXT 18	TC SENSOR TYPE	TC–B	TC–J	TC–J
TXT 36	ANA.OUT	VOLT	CURR	CURR
TXT 37	O.RANGE	0–20	4–20	4–20
TXT 38	OUT.ERR	23MA	23MA	23MA

* SET IN THE FIELD

TO ALTER THE VALUE OF R1.SETP OR R2.SETP:

1. TO CHANGE THE SETPOINT FOR RELAY 1 (R1.SETP), PRESS THE UP ARROW ONCE FROM THE MAIN SCREEN. TO CHANGE THE SETPOINT FOR RELAY 2 (R2.SETP), PRESS THE DOWN ARROW ONCE FROM THE MAIN SCREEN.
2. WHEN ON THE SETPOINT PAGE FOR THE DESIRED RELAY, USE THE UP AND DOWN KEYS TO ADJUST THE SETPOINT AND PRESS OK TO SAVE THE NEW VALUE. PRESS AND HOLD OK TO GO BACK ONE PAGE WITHOUT SAVING.

ULC1 – HYDRORANGER 200

FUNCTION NUMBER		FUNCTION DESCRIPTION	DEFAULT	FACTORY SETTING
P000		LOCK	1954	
P001		OPERATION	3	4
P002		MATERIAL	1	
P003	01	MEASUREMENT RESPONSE	2	3
	02	MEASUREMENT RESPONSE	2	3
P004	01	TRANSDUCER	0	100
	02	TRANSDUCER	0	100
P005		UNITS	1	5
P006	01	EMPTY	26.2	*
	02	EMPTY	26.2	*
P007	01	SPAN	26.2	*
	02	SPAN	26.2	*
P060	01	DECIMAL POSITION	2	
	02	DECIMAL POSITION	2	
P070		FAIL SAFE TIMER	10.0 MIN	0.5 MIN
P071	01	FAIL SAFE LEVEL	HOLD	HI
	02	FAIL SAFE LEVEL	HOLD	LO
P200	01	MA OUTPUT 1 RANGE	2	
	02	MA OUTPUT 2 RANGE	2	
P201	01	MA OUTPUT 1 FUNCTION	0	1
	02	MA OUTPUT 2 FUNCTION	0	1
P202	01	MA OUTPUT 1 ALLOCATION	1	
	02	MA OUTPUT 2 ALLOCATION	2	
P219	01	MA OUTPUT 1 FAILSAFE	OFF	HI
	02	MA OUTPUT 2 FAILSAFE	OFF	LO

NOTES:
1. FACTORY SETTING '*' NOTES PARAMETERS SET IN THE FIELD.
2. THE ABOVE IS A PARTIAL LISTING OF SETPOINTS. REFER TO THE INSTRUCTION MANUAL FOR A COMPLETE PARAMETER LISTING.

SEQUENCE OF OPERATION

SCREEN MODES OF OPERATION:

LCS–HAND: WHEN THE LCS MOUNTED HAND–OFF–REMOTE SELECTOR IS IN THE HAND POSITION, THE SCREEN WILL RUN CONTINUOUSLY. WHEN THE LCS MOUNTED HAND–OFF–REMOTE SELECTOR IS PLACED IN THE OFF POSITION, THE SCREEN WILL PARK AT HOME.

LCS–REMOTE: WHEN THE LCS MOUNTED HAND–OFF–REMOTE SELECTOR IS IN THE REMOTE POSITION, THE SCREEN WILL OPERATE BASED ON THE MAIN CONTROL PANEL OIU MOTOR FACEPLATE. IN REMOTE, THE OPERATORS MAY SELECT EITHER MANUAL, OR AUTO MODES OF OPERATION FROM THE OIU.

OIU–MANUAL: WHEN MANUAL MODE IS SELECTED FROM THE OIU MOTOR FACEPLATE, THE SCREEN WILL START TO RUN WHEN THE START PUSHBUTTON IS PRESSED. THE SCREEN WILL CONTINUE TO RUN UNTIL THE STOP PUSHBUTTON IS PRESSED. WHEN THE STOP PUSHBUTTON IS PRESSED, THE SCREEN WILL PARK AT HOME.

OIU–AUTO: WHEN AUTO MODE IS SELECTED FROM THE OIU MOTOR FACEPLATE, ALL AVAILABLE SCREENS WILL OPERATE PER A LEAD, LAG SEQUENCE. ONCE THE LEVEL OF MATERIAL REACHES THE START SET–POINT OF THE LEVEL CONTROLLER, THE LEAD SCREEN WILL COMPLETE THE NUMBER OF CYCLES SET IN THE SCREEN AUTO STEP COUNTER, THEN DWELL FOR THE TIME SET IN THE SCREEN DWELL TIMER. IF THE LEVEL OF MATERIAL DOES NOT FALL BELOW THE START LEVEL SET–POINT BEFORE THE DWELL TIMER EXPIRES, THE LAG SCREEN WILL COMPLETE THE NUMBER OF CYCLES SET IN THE AUTO STEP COUNTER, THEN DWELL FOR THE TIME SET IN THE SCREEN DWELL TIMER. THIS SEQUENCE WILL CONTINUE UNTIL THE LEVEL OF MATERIAL FALLS BELOW THE START LEVEL SET–POINT. THE LEAD SCREEN WILL ALSO CYCLE ON AND OFF PER THE SETTINGS OF THE SCREEN REPEAT CYCLE TIMERS. THE DUTY OF LEAD, LAG, WILL BE RE–ASSIGNED ONCE THE LEVEL OF MATERIAL IS BELOW THE START LEVEL SET–POINT, AND THE OPERATION OF THE LEAD SCREEN IS COMPLETE. ALL AVAILABLE SCREENS WILL START TO RUN CONTINUOUSLY ONCE A HIGH LEVEL SIGNAL IS RECEIVED FROM THE LEVEL CONTROLLER OR HIGH LEVEL FLOAT SWITCH. THIS OPERATION WILL CONTINUE UNTIL THE LEVEL FALLS BELOW THE START LEVEL SET–POINT, AT WHICH TIME THE SCREENS WILL RESUME LEAD, LAG OPERATION.

NOTES:
1. THE OPERATION STATUS OF EACH MOTOR WILL BE DISPLAYED ON THE OIU.
2. EACH TIME THE LCS SELECTOR IS TAKEN OUT OF REMOTE, THE MOTOR MUST BE PLACED IN AUTO ON THE MAIN CONTROL PANEL OIU.
3. IN ORDER FOR A SCREEN TO OPERATE IN THE LEAD, LAG SEQUENCE, IT MUST BE IN AUTO AND NOT FAULTED. IF A SCREEN IS REMOVED FROM AUTO, OR BECOMES FAULTED, IT WILL BE REMOVED FROM THE LEAD, LAG SEQUENCE.
4. IN THE EVENT OF A HIGH LEVEL, VIA LEVEL TRANSDUCER OR FLOAT SWITCH, THE HIGH LEVEL LIGHT WILL ENERGIZE AND THE ALARM HORN WILL SOUND.

CONVEYOR MODES OF OPERATION:

LCS–HAND: WHEN THE LCS MOUNTED HAND–OFF–REMOTE SELECTOR IS IN THE HAND POSITION, THE CONVEYOR WILL OPERATE PER THE LCS MOUNTED FOR–OFF–REV SELECTOR. THE LCS MOUNTED FOR–OFF–REV SELECTOR WILL SPRING RETURN FROM REV TO OFF.

LCS–REMOTE: WHEN THE LCS MOUNTED HAND–OFF–REMOTE SELECTOR IS IN THE REMOTE POSITION, THE CONVEYOR WILL OPERATE BASED ON THE MAIN CONTROL PANEL OIU MOTOR FACEPLATE. IN REMOTE, THE OPERATORS MAY SELECT EITHER MANUAL, OR AUTO MODES OF OPERATION FROM THE OIU.

OIU–MANUAL: WHEN MANUAL MODE IS SELECTED FROM THE OIU MOTOR FACEPLATE, THE CONVEYOR WILL START TO RUN FORWARD WHEN THE FORWARD PUSHBUTTON IS PRESSED. FORWARD OPERATION WILL CONTINUE UNTIL THE STOP PUSHBUTTON IS PRESSED. THE CONVEYOR WILL START TO RUN IN REVERSE WHEN THE REVERSE PUSHBUTTON IS PRESSED AND HELD. REVERSE OPERATION WILL CONTINUE UNTIL THE REVERSE PUSHBUTTON IS RELEASED.

OIU–AUTO: WHEN AUTO MODE IS SELECTED FROM THE OIU MOTOR FACEPLATE, THE CONVEYOR WILL START TO RUN ONCE THE COMBINED SCREEN CYCLE COUNT REACHES THE CONVEYOR START COUNT SET–POINT. ONCE THE CONVEYOR STARTS TO RUN, IT WILL RUN FOR THE TIME SET IN THE CONVEYOR RUN TIMER.

PRESS MODES OF OPERATION:

LCS–HAND: WHEN THE LCS MOUNTED HAND–OFF–REMOTE SELECTOR IS IN THE HAND POSITION, THE PRESS WILL OPERATE PER THE LCS MOUNTED FOR–OFF–REV SELECTOR. THE LCS MOUNTED FOR–OFF–REV SELECTOR WILL SPRING RETURN FROM REV TO OFF.

LCS–REMOTE: WHEN THE LCS MOUNTED HAND–OFF–REMOTE SELECTOR IS IN THE REMOTE POSITION, THE CONVEYOR WILL OPERATE BASED ON THE MAIN CONTROL PANEL OIU MOTOR FACEPLATE. IN REMOTE, THE OPERATORS MAY SELECT EITHER MANUAL, OR AUTO MODES OF OPERATION FROM THE OIU.

OIU–MANUAL: WHEN MANUAL MODE IS SELECTED FROM THE OIU MOTOR FACEPLATE, THE PRESS WILL START TO RUN FORWARD WHEN THE FORWARD PUSHBUTTON IS PRESSED. FORWARD OPERATION WILL CONTINUE UNTIL THE STOP PUSHBUTTON IS PRESSED. THE PRESS WILL START TO RUN IN REVERSE WHEN THE REVERSE PUSHBUTTON IS PRESSED AND HELD. REVERSE OPERATION WILL CONTINUE UNTIL THE REVERSE PUSHBUTTON IS RELEASED.

OIU–AUTO: WHEN AUTO MODE IS SELECTED FROM THE OIU MOTOR FACEPLATE, THE PRESS WILL OPERATE PER THE WASH CYCLE AUTO SEQUENCE DETAILED BELOW.

SEQUENCE OF OPERATION

WASH CYCLE AUTO SEQUENCE:

A PRESS WASH CYCLE WILL BE INITIATED ONCE THE TOTAL RUN TIME OF THE CONVEYOR HAS REACHED THE CONVEYOR ACCUMULATED RUN TIME SET–POINT. ONCE A WASH CYCLE IS INITIATED, THE PRESS WILL RUN FORWARD FOR THE TIME SET IN THE PRESS INITIAL RUN TIMER. ONCE THE INITIAL RUN TIMER IS COMPLETE, THE PRESS WILL RUN FORWARD FOR THE TIME SET IN THE PRESS FORWARD RUN TIMER, AND DWELL FOR THE TIME SET IN THE PRESS FOR–REV DWELL TIMER. THE PRESS WILL THEN RUN IN REVERSE FOR THE TIME SET IN THE PRESS REVERSE RUN TIMER, AND DWELL FOR THE TIME SET IN THE PRESS REV–FOR DWELL TIMER. EACH TIME THE PRESS FORWARD RUN TIMER STARTS, THE SPRAY WASH SOLENOID WILL OPEN FOR THE TIME SET IN THE SPRAY WASH RUN TIMER. THE PRESS WILL COMPLETE THE NUMBER OF FORWARD–DWELL–REVERSE–DWELL CYCLES SET IN THE PRESS WASH CYCLE COUNTER. ONCE THE PRESS HAS COMPLETED THE SET NUMBER OF CYCLES, THE PRESS WILL RUN CONTINUOUSLY FORWARD FOR THE TIME SET IN THE PRESS DISCHARGE TIMER. ONCE THE DISCHARGE TIMER REACHES ITS SET–POINT, THE DRAIN FLUSH SOLENOID VALVE WILL OPEN FOR THE TIME SET IN THE DRAIN FLUSH RUN TIMER. ONCE THE DRAIN FLUSH SOLENOID VALVE CLOSES, THE WASH CYCLE WILL BE COMPLETE.

NOTES:
1. IF THE SPRAY WASH RUN TIMER SETTING IS GREATER THAN THE COMBINED TOTAL OF THE PRESS FORWARD, REVERSE, AND DWELL TIMERS, THE SPRAY WASH SOLENOID VALVE WILL REMAIN OPEN FOR THE ENTIRE WASH CYCLE.
2. PRESSING AND HOLDING THE SYSTEM RESET PUSHBUTTON FOR 3 SECONDS WILL INITIATE A WASH CYCLE IF THE PRESS IS IN AUTO MODE.

EMERGENCY STOP:
THE SCREENS, PRESS UNITS, AND ALL SPRAY WASHES WILL STOP IMMEDIATELY, AND THE CONTROL POWER ON LIGHT WILL DE–ENERGIZE IF ANY OF THE E–STOP PUSHBUTTONS ARE PRESSED. TO RESET, ENSURE THAT ALL E–STOPS ARE ENABLED AND PRESS THE SYSTEM RESET PUSHBUTTON.

SCREEN FAULTS:
1. A FAULT OCCURS WHEN THE SCREEN POWER MONITOR IS TRIPPED.
2. A FAULT OCCURS WHEN THE SCREEN MOTOR STARTER THERMAL OVERLOAD IS TRIPPED.
3. A FAULT OCCURS WHEN THE SCREEN MOTOR THERMOSTAT IS TRIPPED.
– WHEN FAULTS 1 OR 2 OCCUR, THE SCREEN WILL STOP IMMEDIATELY AND THE SCREEN FAULT LIGHT WILL BE ENERGIZED.
– WHEN FAULT 3 OCCURS, THE SCREEN WILL STOP IMMEDIATELY.
– FAULTS 1 AND 2 CAN BE RESET BY PRESSING THE SYSTEM RESET PUSHBUTTON.
– FAULT 3 WILL AUTOMATICALLY RESET.

CONVEYOR FAULTS:
4. A FAULT OCCURS WHEN THE CONVEYOR LOAD MONITOR IS TRIPPED.
5. A FAULT OCCURS WHEN THE CONVEYOR MOTOR STARTER THERMAL OVERLOAD IS TRIPPED.
6. A FAULT OCCURS WHEN THE CONVEYOR MOTOR THERMOSTAT IS TRIPPED.
7. A FAULT OCCURS WHEN THE CONVEYOR DETECTS ZERO MOTION
– WHEN FAULTS 4, 5, OR 7 OCCUR, THE CONVEYOR WILL STOP IMMEDIATELY AND THE PRESS FAULT LIGHT WILL BE ENERGIZED.
– WHEN FAULT 6 OCCURS, THE CONVEYOR WILL STOP IMMEDIATELY.
– FAULTS 4, 5 AND 7 CAN BE RESET BY PRESSING THE SYSTEM RESET PUSHBUTTON.
– FAULT 6 WILL AUTOMATICALLY RESET.

PRESS FAULTS:
8. A FAULT OCCURS WHEN THE PRESS LOAD MONITOR IS TRIPPED.
9. A FAULT OCCURS WHEN THE PRESS MOTOR STARTER THERMAL OVERLOAD IS TRIPPED.
10. A FAULT OCCURS WHEN THE PRESS MOTOR THERMOSTAT IS TRIPPED.
– WHEN FAULTS 8 OR 9 OCCUR, THE PRESS WILL STOP IMMEDIATELY AND THE PRESS FAULT LIGHT WILL BE ENERGIZED.
– WHEN FAULT 10 OCCURS, THE PRESS WILL STOP IMMEDIATELY.
– FAULT 8 OR 9 CAN BE RESET BY PRESSING THE SYSTEM RESET PUSHBUTTON.
– FAULT 10 WILL AUTOMATICALLY RESET.

REVISION	BY	CHKD	DATE	LTR
				4
				3
				2
				1

DUAL ROTOSCREEN / CONVEYOR / SWP CONTROL PANEL
DESCRIPTION
5HP, 5HP, 5HP, 5HP, 5HP, 480VAC
TYPE | SIZE

DATE	STD. BY	STD.CHKD.	STD.APPVD	SCALE	DATE	PROJ. BY	PROJ.CHKD.	PROJ.APPVD
				NONE	04/11	BMG	RTH	RTH

ALL COMPONENTS MUST BE FABRICATED AND MACHINED ACCORDING TO WESTECH STANDARD SPECIFICATION (DRAWING P24Z–024A), UNLESS SPECIFICALLY NOTED ON THIS DRAWING.

This drawing is property of WESTECH ENGINEERING, INC. and is transmitted in confidence. Neither receipt nor possession confers or transfers any rights to reproduce, use, or disclose, in whole or in part, data contained herein for any purpose, without the written permission of WESTECH ENGINEERING, INC., Salt Lake City, Utah

WESTECH | DRAWING NUMBER: E20D | PROJECT NUMBER: 21258ABC | REV. 0

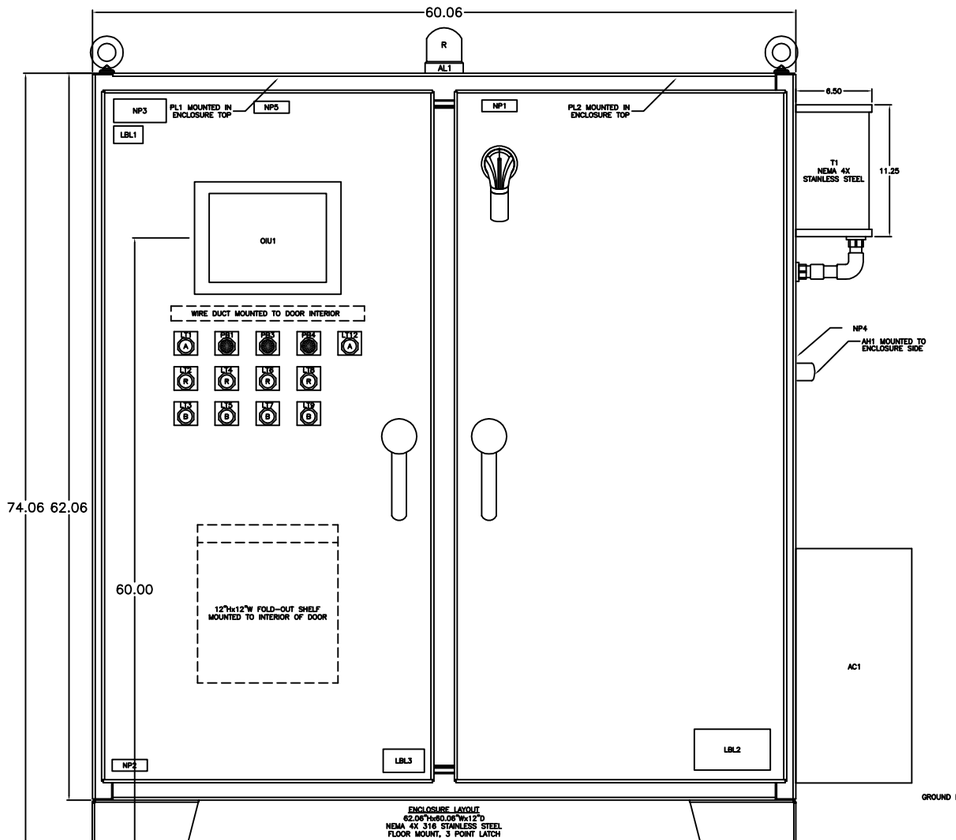

ENCLOSURE LAYOUT
62.06"Hx60.06"Wx12"D
NEMA 4X 316 STAINLESS STEEL
FLOOR MOUNT, 3 POINT LATCH

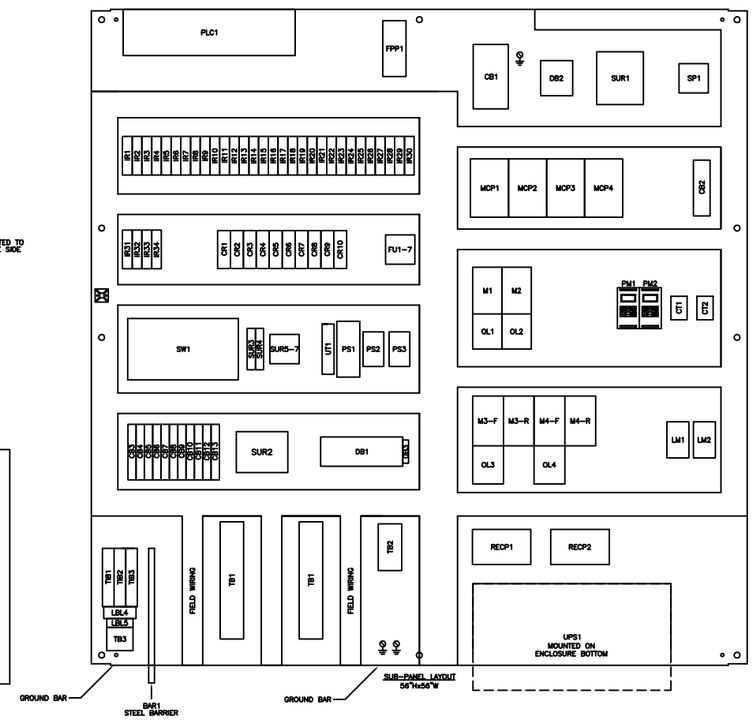

ENGRAVED PILOT DEVICE LEGEND PLATES:

LT1 – CONTROL POWER ON
LT2 – SCREEN NO.1 RUNNING
LT3 – SCREEN NO.1 FAULT
LT4 – SCREEN NO.2 RUNNING
LT5 – SCREEN NO.2 FAULT
LT6 – CONVEYOR RUNNING
LT7 – CONVEYOR FAULT
LT8 – PRESS RUNNING
LT9 – PRESS FAULT
PB1 – EMERGENCY STOP
PB2 – EMERGENCY STOP
PB3 – SYSTEM RESET
PB4 – ALARM SILENCE
SS1 – SCREEN NO.1 HAND–OFF–REMOTE
SS2 – SCREEN NO.2 HAND–OFF–REMOTE
SS3 – CONVEYOR HAND–OFF–REMOTE
SS4 – CONVEYOR FOR–OFF–REV
SS5 – PRESS HAND–OFF–REMOTE
SS6 – PRESS FOR–OFF–REV
SS7 – SPRAY WASH HAND–OFF–REMOTE
SS8 – DRAIN FLUSH HAND–OFF–REMOTE

ENGRAVED NAMEPLATES:

NP1 – 480VAC–3PH–60HZ
NP2 – INTRINSICALLY SAFE CIRCUITS
NP3 – CONTROL PANEL PROVIDES INTRINSICALLY SAFE CIRCUIT EXTENSIONS FOR USE IN CLASS I, GROUPS A, B, C, D; CLASS II, GROUPS E, F, G; CLASS III HAZARDOUS LOCATIONS WHEN CONNECTED PER PEPPERL & FUCHS INSTALLATION DRAWING NO. 116–0145
NP4 – ALARM HORN
NP5 – LCP–101
LCP–104
NP6 – ZERO MOTION SENSOR
NP7 – ULTRASONIC LEVEL CONTROLLER

LABEL DESCRIPTION:

LBL1 – WARNING: MULTIPLE SUPPLY SOURCES OPEN ALL DISCONNECTS BEFORE SERVICING EQUIPMENT OR OTHER UNIT WIRING.
LBL2 – DANGER HIGH VOLTAGE ENTRY BY QUALIFIED PERSON ONLY
LBL3 – ELEMECH ELECTRICAL CONTROL SYSTEMS
LBL4 – WARNING SUBSTITUTION OF COMPONENTS MAY IMPAIR INTRINSIC SAFETY
LBL5 – INTRINSICALLY SAFE FIELD WIRING TERMINALS

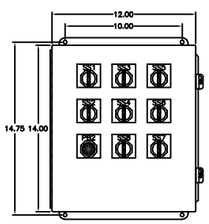

ENCLOSURE LAYOUT
14"Hx12"Wx6"D
NEMA 4X, 316 STAINLESS STEEL, CLASS 1, DIV 2

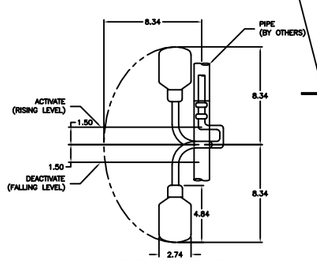

FLOAT SWITCH AND PIPE MOUNT CLAMP
POLYPROPYLENE CASING
N.O. MERCURY–FREE SWITCH
W/20' WATER RESISTANT CPE JACKET TYPE SJOW CABLE

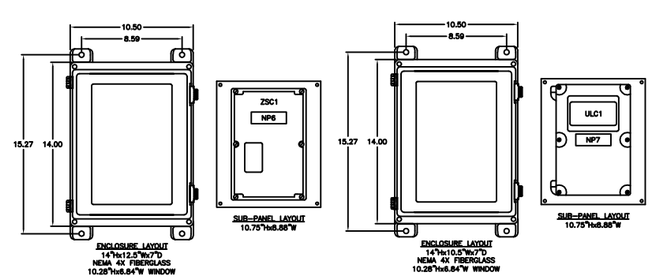

ENCLOSURE LAYOUT
14"Hx12.5"Wx7"D
NEMA 4X FIBERGLASS
10.28"Hx6.84"W WINDOW

SUB-PANEL LAYOUT
10.75"Hx8.88"W

ENCLOSURE LAYOUT
14"Hx10.5"Wx7"D
NEMA 4X FIBERGLASS
10.28"Hx6.84"W WINDOW

SUB-PANEL LAYOUT
10.75"Hx8.88"W

REVISION	BY	CHKD	DATE	LTR
				4
				3
				2
				1

DUAL ROTOSCREEN / CONVEYOR / SWP CONTROL PANEL

DESCRIPTION: 5HP, 5HP, 5HP, 5HP, 5HP, 480VAC

TYPE				SIZE				
				NONE	04/11	BMG	RTH	RTH
DATE	STD. BY	STD.CHKD.	STD.APPVD	SCALE	DATE	PROJ. BY	PROJ.CHKD.	PROJ.APPVD

ALL COMPONENTS MUST BE FABRICATED AND MACHINED ACCORDING TO WESTECH STANDARD SPECIFICATION (DRAWING P24Z–024A), UNLESS SPECIFICALLY NOTED ON THIS DRAWING.

This drawing is property of WESTECH ENGINEERING, INC. and is transmitted in confidence. Neither receipt nor possession confers or transfers any rights to reproduce, use, or disclose, in whole or in part, data contained herein for any purpose, without the written permission of WESTECH ENGINEERING, INC., Salt Lake City, Utah

WESTECH

DRAWING NUMBER	PROJECT NUMBER	REV.
E20D	21258ABC	0